DS-PDP18-HM-WE/WB
Wireless Double PIR Detector

©2022 Hangzhou Hikvision Digital Technology Co., Ltd. All rights reserved.

About this Manual

The Manual includes instructions for using and managing the Product. Pictures, charts, images and all other information hereinafter are for description and explanation only. The information contained in the Manual is subject to change, without notice, due to firmware updates or other reasons. Please find the latest version of this Manual at the Hikvision website (https://www.hikvision.com/).

Please use this Manual with the guidance and assistance of professionals trained in supporting the Product.

HIKVISION and other Hikvision's trademarks and logos are the properties of Hikvision in various jurisdictions. Other trademarks and logos mentioned are the properties of their respective owners.

Disclaimer

TO THE MAXIMUM EXTENT PERMITTED BY APPLICABLE LAW, THIS MANUAL AND THE PRODUCT DESCRIBED, WITH ITS HARDWARE, SOFTWARE AND FIRMWARE, ARE PROVIDED "AS IS" AND "WITH ALL FAULTS AND ERRORS". HIKVISION MAKES NO WARRANTIES, EXPRESS OR IMPLIED, INCLUDING WITHOUT LIMITATION, MERCHANTABILITY, SATISFACTORY QUALITY, OR FITNESS FOR A PARTICULAR PURPOSE. THE USE OF THE PRODUCT BY YOU IS AT YOUR OWN RISK. IN NO EVENT WILL HIKVISION BE LIABLE TO YOU FOR ANY SPECIAL, CONSEQUENTIAL, INCIDENTAL, OR INDIRECT DAMAGES, INCLUDING, AMONG OTHERS, DAMAGES FOR LOSS OF BUSINESS PROFITS, BUSINESS INTERRUPTION, OR LOSS OF DATA, CORRUPTION OF SYSTEMS, OR LOSS OF DOCUMENTATION, WHETHER BASED ON BREACH OF CONTRACT, TORT (INCLUDING NEGLIGENCE), PRODUCT LIABILITY, OR OTHERWISE, IN CONNECTION WITH THE USE OF THE PRODUCT, EVEN IF HIKVISION HAS BEEN ADVISED OF THE POSSIBILITY OF SUCH DAMAGES OR LOSS.

YOU ACKNOWLEDGE THAT THE NATURE OF INTERNET PROVIDES FOR INHERENT SECURITY RISKS, AND HIKVISION SHALL NOT TAKE ANY RESPONSIBILITIES FOR ABNORMAL OPERATION, PRIVACY LEAKAGE OR OTHER DAMAGES RESULTING FROM CYBER-ATTACK, HACKER ATTACK, VIRUS INSPECTION, OR OTHER INTERNET SECURITY RISKS; HOWEVER, HIKVISION WILL PROVIDE TIMELY TECHNICAL SUPPORT IF REQUIRED.

YOU AGREE TO USE THIS PRODUCT IN COMPLIANCE WITH ALL APPLICABLE LAWS, AND YOU ARE SOLELY RESPONSIBLE FOR ENSURING THAT YOUR USE CONFORMS TO THE APPLICABLE LAW. ESPECIALLY, YOU ARE RESPONSIBLE, FOR USING THIS PRODUCT IN A MANNER THAT DOES NOT INFRINGE ON THE RIGHTS OF THIRD PARTIES, INCLUDING WITHOUT LIMITATION, RIGHTS OF PUBLICITY, INTELLECTUAL PROPERTY RIGHTS, OR DATA PROTECTION AND OTHER PRIVACY RIGHTS. YOU SHALL NOT USE THIS PRODUCT FOR ANY PROHIBITED END-USES, INCLUDING THE DEVELOPMENT OR PRODUCTION OF WEAPONS OF MASS DESTRUCTION, THE DEVELOPMENT OR PRODUCTION OF CHEMICAL OR BIOLOGICAL WEAPONS, ANY ACTIVITIES IN THE CONTEXT RELATED TO ANY NUCLEAR EXPLOSIVE OR UNSAFE NUCLEAR FUEL-CYCLE, OR IN SUPPORT OF HUMAN RIGHTS ABUSES.

IN THE EVENT OF ANY CONFLICTS BETWEEN THIS MANUAL AND THE APPLICABLE LAW, THE LATER PREVAILS.

This product and - if applicable - the supplied accessories too are marked with "CE" and comply therefore with the applicable harmonized European standards listed under the Directive 2014/53/EU(RED),Directive 2014/30/EU(EMCD),Directive 2014/35/EU(LVD),Directive 2011/65/EU(RoHS).

2012/19/EU (WEEE directive): Products marked with this symbol cannot be disposed of as unsorted municipal waste in the European Union. For proper recycling, return this product to your local supplier upon the purchase of equivalent new equipment, or dispose of it at designated collection points. For more information see: www.recyclethis.info

2006/66/EC (battery directive): This product contains a battery that cannot be disposed of as unsorted municipal waste in the European Union. See the product documentation for specific battery information. The battery is marked with this symbol, which may include lettering to indicate cadmium (Cd), lead (Pb), or mercury (Hg). For proper recycling, return the battery to your supplier or to a designated collection point. For more information see:www.recy-clethis.info

1. Risk of explosion if the battery is replaced by an incorrect type.
2. Improper replacement of the battery with an incorrect type may defeat a safeguard (for example, in the case of some lithium battery types).
3. Do not dispose of the battery into fire or a hot oven, or mechanically crush or cut the battery, which may result in an explosion.
4. Do not leave the battery in an extremely high temperature surrounding environment, which may result in an explosion or the leakage of flammable liquid or gas.
5. Do not subject the battery to extremely low air pressure, which may result in an explosion or the leakage of flammable liquid or gas.
6. Dispose of used batteries according to the instructions.

+ identifies the positive terminal(s) of equipment which is used with, or generates direct current. - identifies the negative terminal(s) of equipment which is used with, or generates direct current.

1. Install the equipment according to the instructions in this manual.
2. To prevent injury, this equipment must be securely attached to the floor/wall in accordance with the installation instructions.

The serial port of the equipment is used for debugging only.

1 Appearance

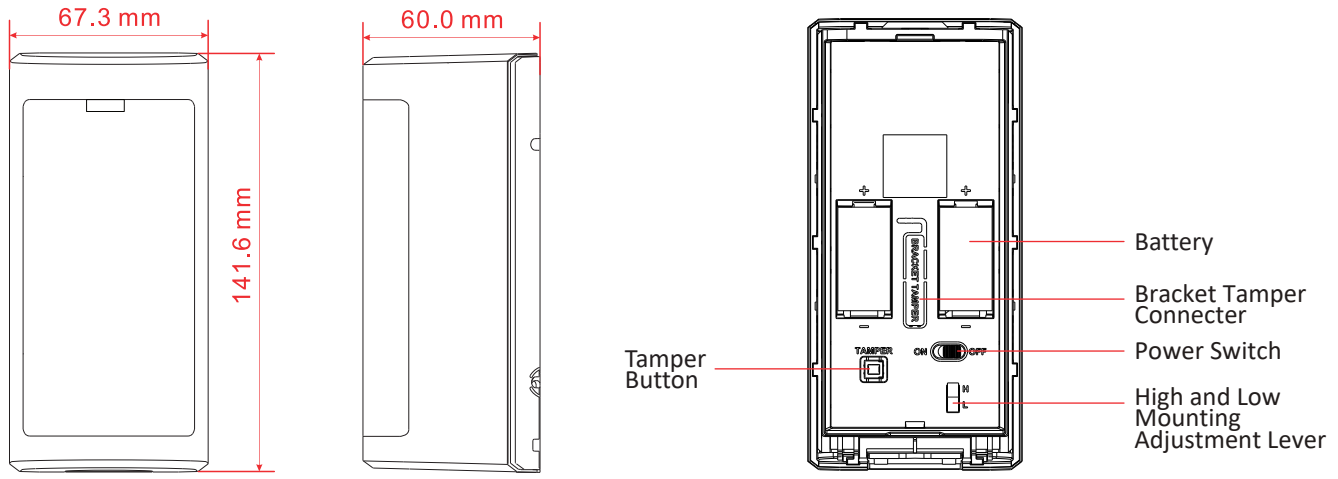

Hangzhou Hikvision Digital Technology CO.,Ltd. No.555 Qianmo Road, Binjiang District, Hangzhou 310052, China

2 Set Up

1. Enrollment

- Enrollment Preparation

Log in to the APP Store, download and install the App.
Power on the security control panel.
Log in the APP and tap the icon "+" . Scan the QR code or input the control panel serial No. to add the control panel.

❶ Enroll the Peripheral Locally

In the APP, tap the "Enrollment Mode" button on the control panel page to make the control panel enter the enrollment status.

❷ Enroll the Peripheral with QR and serial No.

In the APP, tap the icon "+"and scan the QR code or serial No. on the peripheral.

2. Adjust the knob to the unlock icon.
3. Press the button to remove the rear panel and the middle frame.
4. Adjust the power switch to ON.
   Enrollment succeeded: Flash green for 7 times.

3 Installation

1. Adjust H or L mode according to the mounting height.
   H Model: 2.5 to 3 m (typical 2.7 m)
   L Model: 0.8 to 1.2 m (typical 1 m)
2. Check Signal Strength
   Solid Green for 3 s - Strong Signal
   Solid Orange for 3 s - Medium Signal
   Solid Red for 3 s - Weak Signal
   Flash Red for 6 times - Lost Signal
3. Slide the middle frame downward to seperate the middle frame and the rear panel.

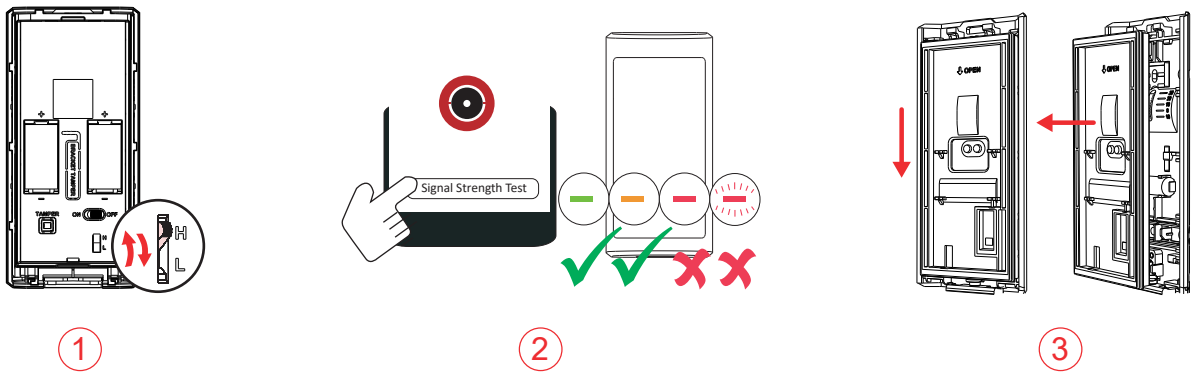

Hangzhou Hikvision Digital Technology CO.,Ltd. No.555 Qianmo Road, Binjiang District, Hangzhou 310052, China

❶ Mounting with screws

4. Secure the rear panel with 2 screws.
5.6. Install the middle frame back to the rear panel.
7. Install the front panel back.
8. Adjust the knob to the lock icon.

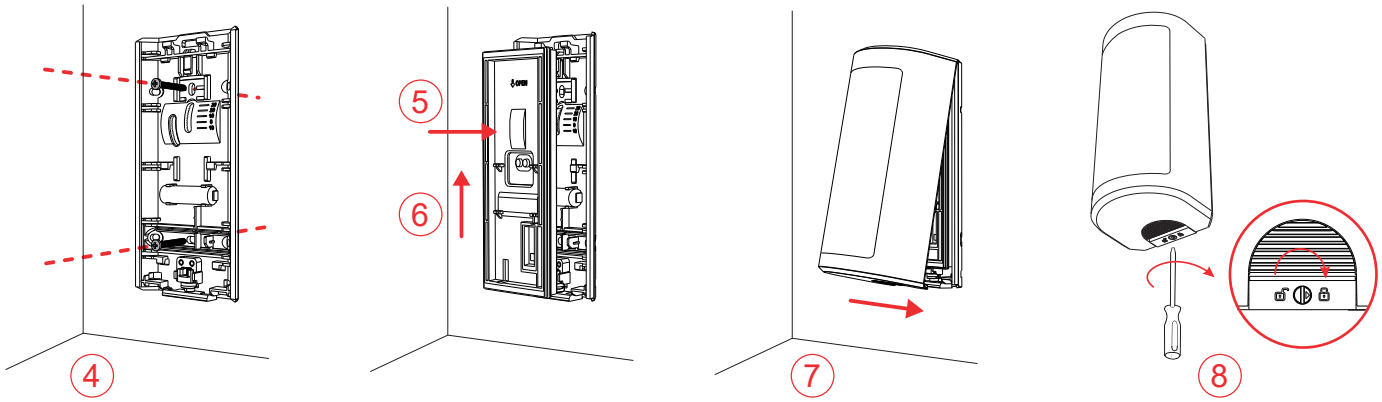

❷ Mounting with bracket

4. Secure the bracket with one screw.
5. Thread the tamper wire out of the hole. Install the rear panel to the bracket with one screw.
6. Remove the soft glue at the threading hole of the middle frame.
7. Thread the tamper wire through the hole of the middle frame.
8.9. Install the middle frame back to the rear panel.
10. Remove the bracket tamper connector.
11. Connect and fix the tamper wire with the bracket tamper connector.
12. Install the front panel back.
13. Adjust the knob to the lock icon.

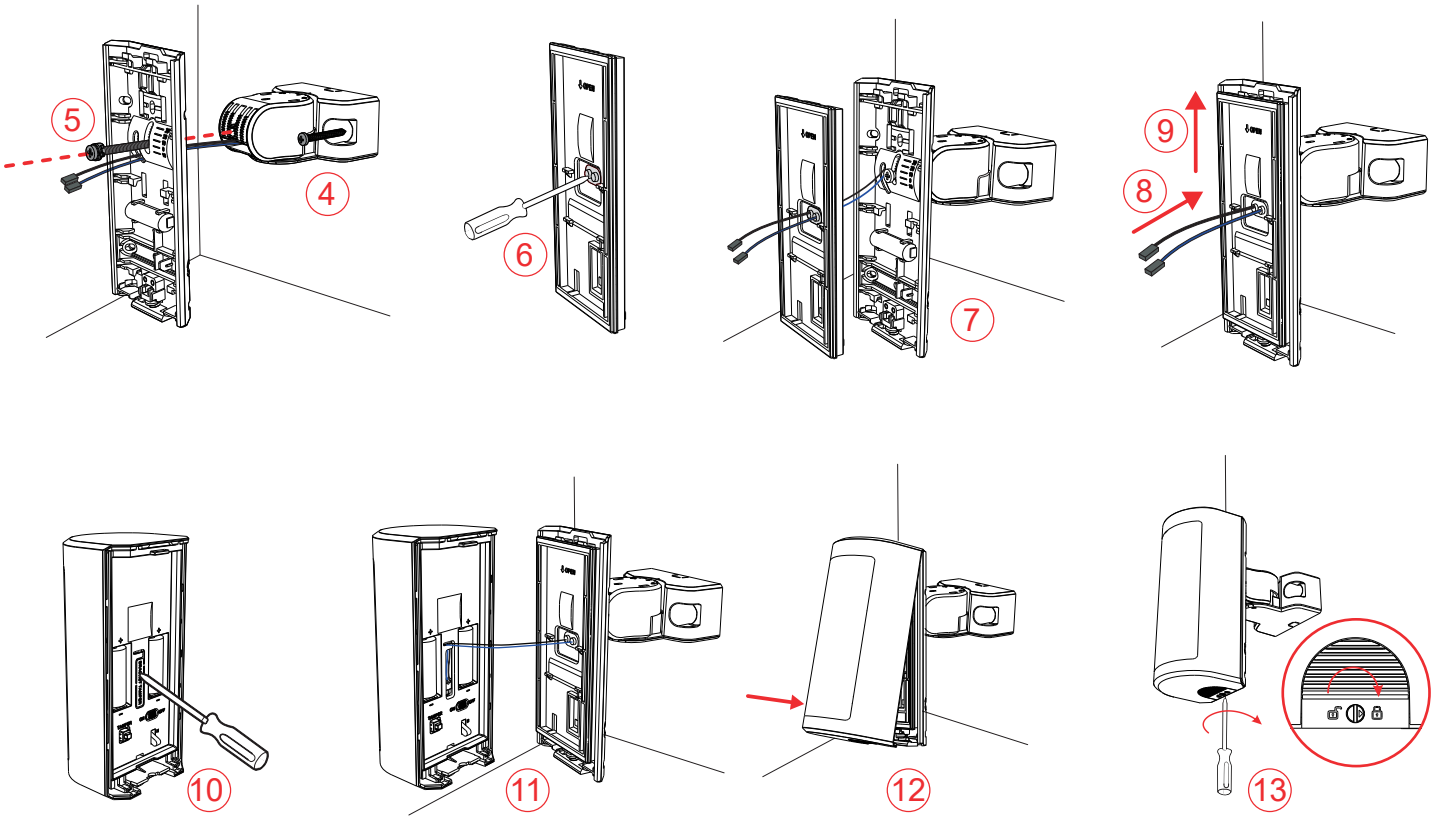

Hangzhou Hikvision Digital Technology CO.,Ltd. No.555 Qianmo Road, Binjiang District, Hangzhou 310052, China

4 Detection Range

Top View

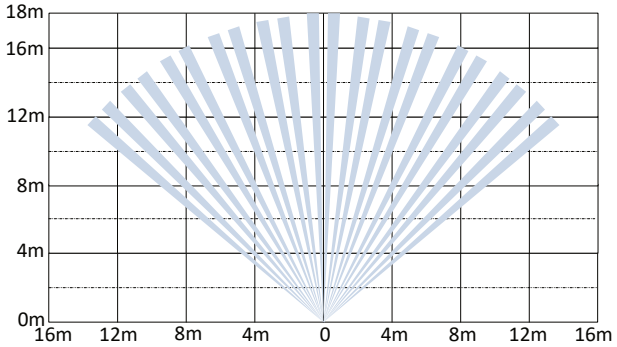

Side View

High Mounting (Pet immunity is supported only at a downtilt angle of 0°.)

Recommended Installation Height and Angle

Mounting Height	Downtilt Angle	Detection Range
2.5 m	0°	3 m to 18 m
2.7 m	10°	3 m to 13 m
3.0 m	10°	3 m to 14 m

The detection range is measured at a detection ambient temperature of 23°C. It is recommended that adjust the downtilt to meet the actual application scenario. Increasing the downtilt will reduce blind spots in downward detection but sacrifice long-range detection performance.

Low Mounting

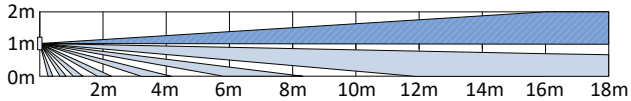

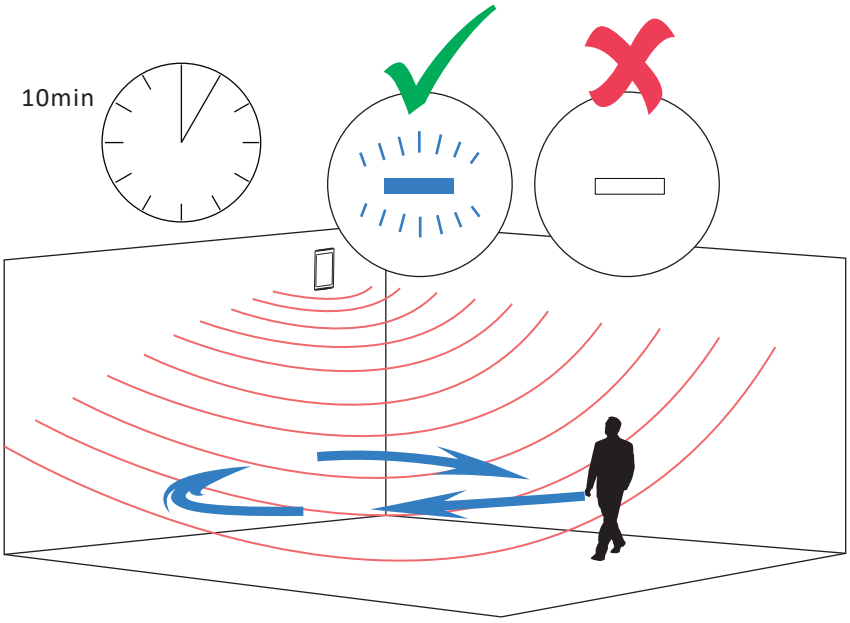

5 Set Up with App

You can view the device status including temperature, signal intensity, battery level, lid, external input, etc.,on the device page.
Tap the ⚙ button to enter the settings page.

6 Operation Caution and Device Maintenance

- All the electronic operation should be strictly compliance with the electrical safety regulations, fire prevention regulations and other related regulations in your local region.
- Do not drop the device or subject it to physical shock, and do not expose it to high electromagnetism radiation. Avoid the equipment installation on vibrations surface or places subject to shock (ignorance can cause equipment damage).
- Please make sure that the power has been disconnected before you wire, install or dismantle the device.
- If smoke, odors or noise rise from the device, turn off the power at once and unplug the power cable, and then please contact the service center.
- Do not drop the device or subject it to physical shock, and do not expose it to high electromagnetism radiation. Avoid the equipment installation on vibrations surface or places subject to shock (ignorance can cause equipment damage).
- Do not place the device in extremely hot (refer to the specification of the device for the detailed operation temperature), cold, dusty or damp locations, and do not expose it to high electromagnetic radiation.
- The device for indoor use shall be kept from rain and moisture.
Exposing the equipment to direct sun light, low ventilation or heat source such as heater or radiator is forbidden (ignorance can cause fire danger).
- Do not aim the device at the sun or extra bright places. A blooming or smear may occur otherwise (which is not a malfunction however), and affecting the endurance of sensor at the same time.
- Improper use or replacement of the battery may result in hazard of explosion. Replace with the same or equivalent type only. Dispose of used batteries according to the instructions provided by the battery manufacturer.
- Do not expose the device to the corrosive gas. Otherwise the equipment damage may occur.
- Do not expose the device to the explosive situation.

Hangzhou Hikvision Digital Technology CO.,Ltd. No.555 Qianmo Road, Binjiang District, Hangzhou 310052, China

7 Specification

Detection Method	Passive Infrared
Detection Range	18 m(16 m according to EN50131-2-2)
Detection Angle	90°
Detection Zones	118
Detectable Speed	0.3 to 2 m/s
Sensitivity	Auto, Pet
White Light Filter	20000lux
Pet Immunity	Up to 24 Kg
Digital Temperature Compensation	Support
Digital Processing	Support
Sealed Optics	Support
Tamper Protection	Front, Rear
Environment Temperature Indicator	Support
Signal Strength Indicator	Support
Directional Detection	Support
Power Switch	Power Up Enrolling
LED Indicator	Blue(Alarm)
Transmission Technology	Tri-X Wireless
Transmission Method	Two-Way RF Wireless
Transmission Frequency	868 MHz
Transmission Security	AES-128 Encryption
Transmission Range(Free Space)	1.6 Km
Frequency Hopping	Support
Enrolling Method	Power up, Remote ID, QR Code
Standard Battery Life	5 years in work status (being triggered 20 times per day)
Power Supply	Battery Powered
Battery Type	CR123A × 2
Typical Voltage	3 V
Operation Temperature	-25 °C to 60 °C (-13 °F to 140 °F)
Storage Temperature	-25 °C to 60 °C (-13 °F to 140 °F)
Operation Humidity	10% to 90%
IP Rate	IP65
Dimension(W × H × D)	67.3 mm × 141.6 mm × 60 mm
Weight	301 g
Mounting Height	2.5 to 3m High Mount 0.8 to 1.2m Low Mount
Mounting Method	Wall
Application Scenario	Indoor, Outdoor
Bracket	Adjustment bracket included

Hangzhou Hikvision Digital Technology CO.,Ltd. No.555 Qianmo Road, Binjiang District, Hangzhou 310052, China