Digital Signage

Quick Start Guide

Legal Information

About this Document

- This Document includes instructions for using and managing the Product. Pictures, charts, images and all other information hereinafter are for description and explanation only.
- The information contained in the Document is subject to change, without notice, due to firmware updates or other reasons. Please find the latest version of the Document at the Hikvision website (***https://www.hikvision.com***). Unless otherwise agreed, Hangzhou Hikvision Digital Technology Co., Ltd. or its affiliates (hereinafter referred to as "Hikvision") makes no warranties, express or implied.
- Please use the Document with the guidance and assistance of professionals trained in supporting the Product.

About this Product

This product can only enjoy the after-sales service support in the country or region where the purchase is made.

Acknowledgment of Intellectual Property Rights

- Hikvision owns the copyrights and/or patents related to the technology embodied in the Products described in this Document, which may include licenses obtained from third parties.
- Any part of the Document, including text, pictures, graphics, etc., belongs to Hikvision. No part of this Document may be excerpted, copied, translated, or modified in whole or in part by any means without written permission.
- HIKVISION and other Hikvision's trademarks and logos are the properties of Hikvision in various jurisdictions.
- Other trademarks and logos mentioned are the properties of their respective owners.
- HDMI™ HIGH-DEFINITION MULTIMEDIA INTERFACE The terms HDMI, HDMI High-Definition Multimedia Interface, HDMI Trade dress and the HDMI Logos are trademarks or registered trademarks of HDMI Licensing Administrator, Inc.

LEGAL DISCLAIMER

- TO THE MAXIMUM EXTENT PERMITTED BY APPLICABLE LAW, THIS DOCUMENT AND THE PRODUCT DESCRIBED, WITH ITS HARDWARE, SOFTWARE AND FIRMWARE, ARE PROVIDED "AS IS" AND "WITH ALL FAULTS AND ERRORS". HIKVISION MAKES NO WARRANTIES, EXPRESS OR IMPLIED, INCLUDING WITHOUT LIMITATION, MERCHANTABILITY, SATISFACTORY QUALITY, OR FITNESS FOR A PARTICULAR PURPOSE. THE USE OF THE PRODUCT BY YOU IS AT YOUR OWN RISK. IN NO EVENT WILL HIKVISION BE LIABLE TO YOU FOR ANY SPECIAL, CONSEQUENTIAL, INCIDENTAL, OR INDIRECT DAMAGES, INCLUDING, AMONG OTHERS, DAMAGES FOR LOSS OF BUSINESS PROFITS, BUSINESS INTERRUPTION, OR LOSS OF DATA, CORRUPTION OF SYSTEMS, OR LOSS OF DOCUMENTATION, WHETHER BASED

ON BREACH OF CONTRACT, TORT (INCLUDING NEGLIGENCE), PRODUCT LIABILITY, OR OTHERWISE, IN CONNECTION WITH THE USE OF THE PRODUCT, EVEN IF HIKVISION HAS BEEN ADVISED OF THE POSSIBILITY OF SUCH DAMAGES OR LOSS.

- YOU ACKNOWLEDGE THAT THE NATURE OF THE INTERNET PROVIDES FOR INHERENT SECURITY RISKS, AND HIKVISION SHALL NOT TAKE ANY RESPONSIBILITIES FOR ABNORMAL OPERATION, PRIVACY LEAKAGE OR OTHER DAMAGES RESULTING FROM CYBER-ATTACK, HACKER ATTACK, VIRUS INFECTION, OR OTHER INTERNET SECURITY RISKS; HOWEVER, HIKVISION WILL PROVIDE TIMELY TECHNICAL SUPPORT IF REQUIRED.
- YOU AGREE TO USE THIS PRODUCT IN COMPLIANCE WITH ALL APPLICABLE LAWS, AND YOU ARE SOLELY RESPONSIBLE FOR ENSURING THAT YOUR USE CONFORMS TO THE APPLICABLE LAW. ESPECIALLY, YOU ARE RESPONSIBLE, FOR USING THIS PRODUCT IN A MANNER THAT DOES NOT INFRINGE ON THE RIGHTS OF THIRD PARTIES, INCLUDING WITHOUT LIMITATION, RIGHTS OF PUBLICITY, INTELLECTUAL PROPERTY RIGHTS, OR DATA PROTECTION AND OTHER PRIVACY RIGHTS. YOU SHALL NOT USE THIS PRODUCT FOR ANY PROHIBITED END-USES, INCLUDING THE DEVELOPMENT OR PRODUCTION OF WEAPONS OF MASS DESTRUCTION, THE DEVELOPMENT OR PRODUCTION OF CHEMICAL OR BIOLOGICAL WEAPONS, ANY ACTIVITIES IN THE CONTEXT RELATED TO ANY NUCLEAR EXPLOSIVE OR UNSAFE NUCLEAR FUEL-CYCLE, OR IN SUPPORT OF HUMAN RIGHTS ABUSES.
- IN THE EVENT OF ANY CONFLICTS BETWEEN THIS DOCUMENT AND THE APPLICABLE LAW, THE LATTER PREVAILS.

© Hangzhou Hikvision Digital Technology Co., Ltd. All rights reserved.

Applicable Models

This manual is applicable to the Digital Signage.

Symbol Conventions

The symbols that may be found in this document are defined as follows.

Symbol	Description
Note	Provides additional information to emphasize or supplement important points of the main text.
Caution	Indicates a potentially hazardous situation, which if not avoided, could result in equipment damage, data loss, performance degradation, or unexpected results.
Danger	Indicates a hazard with a high level of risk, which if not avoided, will result in death or serious injury.

Safety Instructions

Please read all the safety information carefully before using.

- In the use of the product, you must be in strict compliance with the electrical safety regulations of the nation and region.
- The device shall not be exposed to water dripping or splashing, and no objects filled with liquids, such as vases, shall be placed on the device.
- Provide a surge suppressor at the inlet opening of the device under special conditions such as the mountain top, iron tower, and forest.
- The socket-outlet shall be installed near the device and shall be easily accessible.
- Do not touch the bare components (such as the metal contacts of the inlets) and wait for at least 5 minutes, since electricity may still exist after the device is powered off.
- WARNING
  1) Do not ingest battery. Chemical Burn Hazard!
  2) This product contains a coin/button cell battery. If the coin/button cell battery is swallowed, it can cause severe internal burns in just 2 hours and can lead to death.
  3) Keep new and used batteries away from children.
  4) If the battery compartment does not close securely, stop using the product and keep it away from children.
  5) If you think batteries might have been swallowed or placed inside any part of the body, seek immediate medical attention.

6) CAUTION: Risk of explosion if the battery is replaced by an incorrect type.
7) Improper replacement of the battery with an incorrect type may defeat a safeguard (for example, in the case of some lithium battery types).
8) Do not dispose of the battery into fire or a hot oven, or mechanically crush or cut the battery, which may result in an explosion.
9) Do not leave the battery in an extremely high temperature surrounding environment, which may result in an explosion or the leakage of flammable liquid or gas.
10) Do not subject the battery to extremely low air pressure, which may result in an explosion or the leakage of flammable liquid or gas.
11) Dispose of used batteries according to the instructions.

- identifies the battery holder itself and identifies the positioning of the cells inside the battery holder.
- + identifies the positive terminals of the device which is used with, or generates direct current, and - identifies the negative terminal(s) of the device which is used with, or generates direct current.
- No naked flame sources, such as lighted candles, should be placed on the device.
- The ventilation should not be impeded by covering the ventilation openings with items, such as newspapers, table-cloths, curtains. The openings shall never be blocked by placing the device on a bed, sofa, rug, or other similar surface.
- If no power adapter is provided, ensure the power adapter or other power supply complies with Limited Power Source. Refer to the product label for the power supply output parameters.
- Install the device according to the instructions in Quick Start Guide.
- To prevent injury, this device must be securely attached to the installation surface in accordance with the installation instructions.
- Never place the device in an unstable location. The device may fall, causing serious personal injury or death.
- The additional force shall be equal to three times the weight of the device but not less than 50 N. The device and its associated mounting means shall remain secure during the installation.
- After the installation, the device, including any associated mounting plate, shall not be damaged.
- ALWAYS use cabinets or stands or mounting methods recommended by the manufacturer of the television set.
- ALWAYS use furniture that can safely support the television set.
- ALWAYS ensure the television set is not overhanging the edge of the supporting furniture.
- ALWAYS route cords and cables connected to your television so they cannot be tripped over, pulled or grabbed.
- NEVER place a television set in an unstable location.
- NEVER place the television set on tall furniture (for example, cupboards or bookcases) without anchoring both the furniture and the television set to a suitable support.

- NEVER place the television set on cloth or other materials that may be located between the television set and supporting furniture.
- NEVER place items that might tempt children to climb, such as toys and remote controls, on the top of the television or furniture on which the television is placed.
- Do not touch the sharp edges or corners.
- CAUTION: If the bracket is designed for a specific device model of our company, use the bracket with the corresponding device only. Use with other devices may result in instability and cause injury. Refer to Datasheet for details.
- CAUTION: If the device needs to be installed with a specific bracket of our company, use the corresponding bracket only. Use others (such as carts, stands, and carriers) may result in instability and cause injury. Refer to the device datasheet for bracket model details.
- For the device with sound playing function, to prevent possible hearing damage, do not listen at high volume levels for long periods.
- The interface varies with the models. Please refer to the product datasheet for details.
- Make sure that the power has been disconnected before you wire, install, or disassemble the device.
- If smoke, odor, or noise arises from the device, immediately turn off the power, unplug the power cable, and contact the service center.
- The USB port of the equipment is used for connecting to a mouse, keyboard, USB flash drive, or Wi-Fi dongle only, and does not support charging devices with lithium batteries.

TABLE OF CONTENTS

Chapter 1 Introduction **1**
Chapter 2 Operation and Maintenance Precautions **2**
2.1 Use of Power Cable 2
2.2 Cleaning and Maintenance 3
Chapter 3 Preparation for Installation **4**
3.1 Precautions for Installation 4
3.2 Packaging List 4
3.3 Remote Control 5
Chapter 4 Installation **6**
4.1 Installation Description 6
4.2 Mounting 6
Chapter 5 Startup and Shutdown **8**
5.1 Device Startup 8
5.2 Shutdown 8
Chapter 6 Device Operation **9**

Chapter 1 Introduction

The Digital Signage (hereafter referred as “the device”) features a 4-equilateral design with a narrower bezel, slim body, and ultra-thin back shell design. The simple wire guide groove can reasonably wire and manage the power and signal cables.

Digital Signage can switch between landscape and portrait modes freely, allowing simultaneous playback of images and videos in multiple windows. High brightness and high fogging professional commercial display screens ranging from 500 to 700 nits, ensuring clearer content display in bright environments, which is widely used for smart advertising and intelligent promotion.

Key Features

- Ultra-narrow bezel, even bezel design.
- Ultra-thin back shell design with wire guide groove.
- 4K HD picture quality with more detailed image details.
- Saturated high color gamut, clear and wide viewing angles.

Chapter 2 Operation and Maintenance Precautions

The LCD panel on the device is made by high-precision technology. However, tiny spots on the screen that are always or never lit may be observed, or when observed from side, the color and brightness may appear to be uneven. Yet the above phenomena are common among LCD displays rather than faults and will not affect the performance of the device.

- Our company is not responsible for any fault caused by third-party when operating the device and other failure or damage incurred.
- Do not operate the device in an environment of dust, high humidity, or oil and steam contacting to avoid the risk of fire and damage.
- Do not place the device under direct sunlight or near strong light source.
- Do not place the device near other equipment with strong radiation.
- Do not expose the device to rain or humid environment.
- Do not place the device on unstable or unsafe surface. Avoid strong impact, vibration or vibration.
- Do not operate the device near heating device or place of high temperature to avoid the risk of fire.
- After moving the device from low temperature environment to high temperature environment, please do not turn on the device immediately and wait for the condensation to evaporate.
- Do not insert any object into the device.
- Do not place heavy objects upon the device.
- The device and its accessories are subject to change without prior notice.
- The fragile materials of the display are vulnerable to falling and impact. Please hold with care.
- Improper operations during debugging and operating may cause damage to the device.
- Scratching or knocking the device with hard objects is strictly forbidden. Do not frequently turn on/off the power of the device when operating to avoid the risk of damage and faults.
- If smoke, odor or noise rise from the device, turn off the power at once and unplug the power cable, and then please contact the service center.

2.1 Use of Power Cable

- If the power cable is damaged or failed, contact service center. Make sure the power supply is properly grounded and matches the requirements specified by the plate on the shell.
- Do not expose the device to rain or humid environment. Disconnect power plug and antenna in thunderstorm weather.

- If the device will not be used for a long time. Shut down the power of the device and disconnect the power supply.
- Electric discharge may last for a short period of time after the power is shut down. Please wait for two minutes after the power shut down to operate the device.
- Only use the original power cable delivered with the device. Contact authorized dealer to purchase power cable with same specifications.
- Make sure the power supply is grounded.
- Do not let dust or metal attachment adhere to the power plug and socket.
- Do not modify the cable in any form.
- Do not place heavy object on the cable.
- Keep the cable away from heat.
- Do not disconnect the power plug by pulling the cable.
- Keep the power cable away from physical or mechanical damage.
- The cable is applicable only to the Interactive Display. Do not use it on other devices.

2.2 Cleaning and Maintenance

- The hole on the rear shell is for heat dissipation. Do not pour or spray liquid to the rear shell or use wet cloth for cleaning.
- Disconnect the power plug before cleaning.
- Do not display images with high brightness on the screen for too long.
- Use a dry, soft and dust-free cloth to clean the device.
- Contact service center for internal cleaning.
- Proper maintenance can avoid certain early-stage failures.
- Clean the device on a regular basis to make the device look new.
- Do not clean the device with water, spray cleaner or industrial chemical reagent. Prevent foreign matters from entering the device.
- Contact qualified service personnel for device maintenance. If the device is damaged, please contact our company, do not carry out unauthorized maintenance.

Chapter 3 Preparation for Installation

3.1 Precautions for Installation

- Clean the device screen and back before installation for best performance.
- For safety, only use the wall mount or base provided by the manufacturer.
- Contact professional staff for wall mounting.
- Check the accessories before the installation. Contact the dealer if anything is missing.
- Do not install the device too tight. Otherwise the screen may be distorted.
- Mount the device on load-bearing wall.
- Place the device on a stable surface or fix the device steadily on the wall.
- Install the device near an available AC power socket for easy power connection. Use the same ground cable with other devices to prevent signal interference.
- Do not place the device near mechanical vibration source.
- Do not place the device in an environment where insects have easy access.
- Do not let the device face the air conditioner directly to avoid condensing.
- Do not place the device in strong electromagnetic field to avoid radio interference.

3.2 Packaging List

Table 3-1 Packaging List

Name	Quantity	Name	Quantity
Digital Signage	1	Remote control	1
Wall-mounted bracket	1	Regulatory Compliance and Safety Information	1
Bracket installation description	1	Quick Start Guide	1
Bracket screw pack	1	Energy sticker	1
AC powerline	1	Nichrome logo	1
RS232 serial cable	1	/	/

Note

Before installing the device, please check the Digital Signage and accessories. If any parts are damaged or missing, please contact the local supplier.

3.3 Remote Control

Apart from connecting mouse to operate on the device, you can also use infrared remote control. The instruction image is as follows.

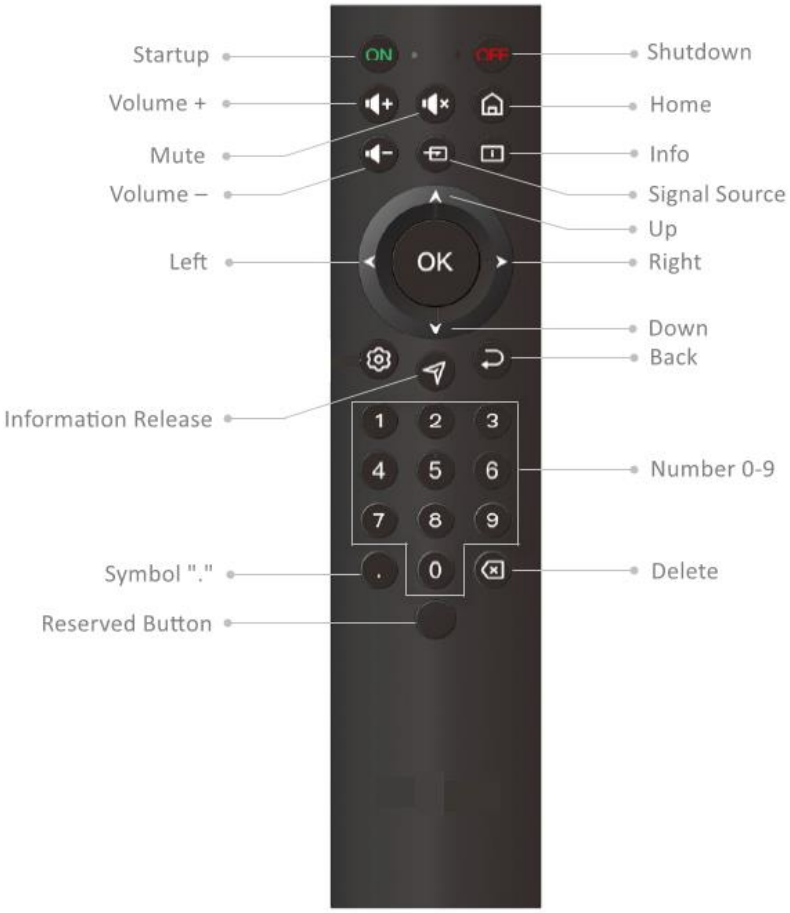

Figure 3-1 Remote Control

Note

The remote control may vary according to different versions. Please refer to the actual situation.

Chapter 4 Installation

4.1 Installation Description

- During the installation process, the wall-mounted bracket should be kept the distance of 30 mm from the wall.
- The maximum bearing weight of the wall-mounted bracket is 40 kg.
- At least 2 professionals are required to complete the installation.

4.2 Mounting

The device can be installed with wall mounting as shown below.

Steps

Step 1 Select 4 M6 screws according to the aperture on the back of the device, and fix the 2 vertical brackets on the back.

Note

- Please make sure that the 2 vertical brackets are fixed on the same height.
- Please make sure that the direction of the 2 vertical brackets is correct.

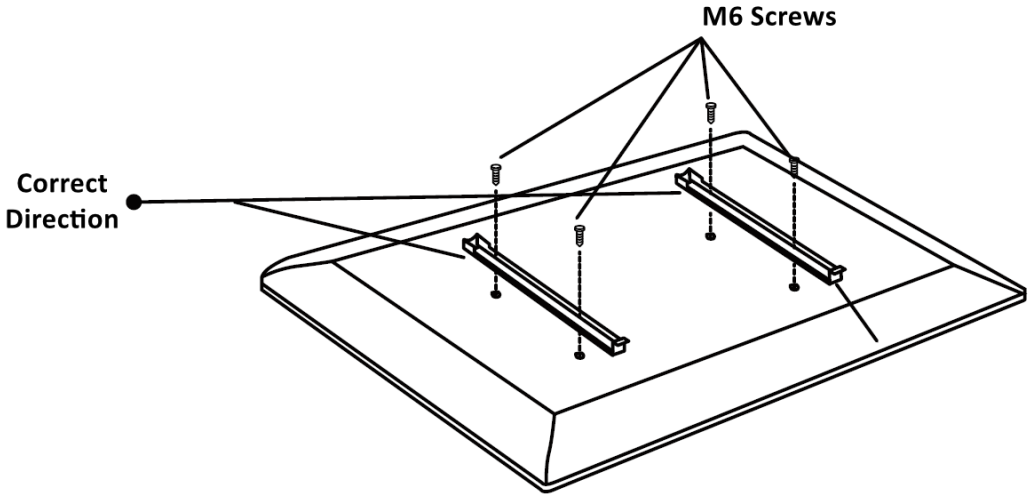

Figure 4-1 Fix Vertical Brackets

Step 2 Fix the rear panel on the wall with 4 screws and bolts. Drill holes to fix screws in the hole position as needed. Adjust the rear panel to horizontal position.

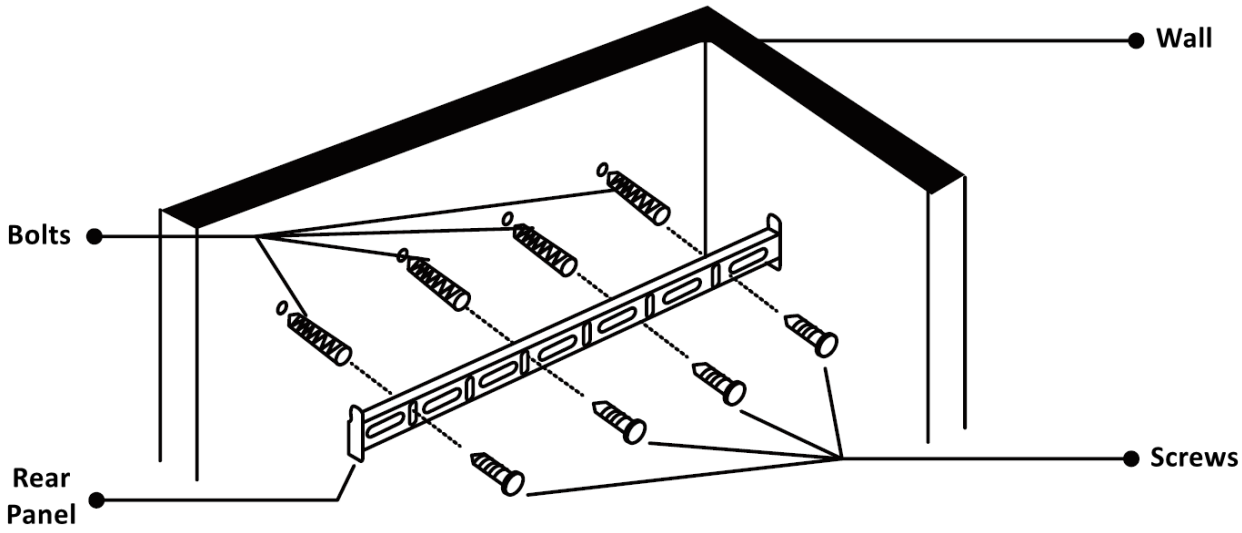

Figure 4-2 Fix Rear Panel

Step 3 Hang the device with 2 vertical brackets (①) on the rear panel. Fix the screws (②) in the vertical brackets to complete the installation.

Note

- Please organize all cables after completing installation.
- At least 2 professionals are required to hang the device.

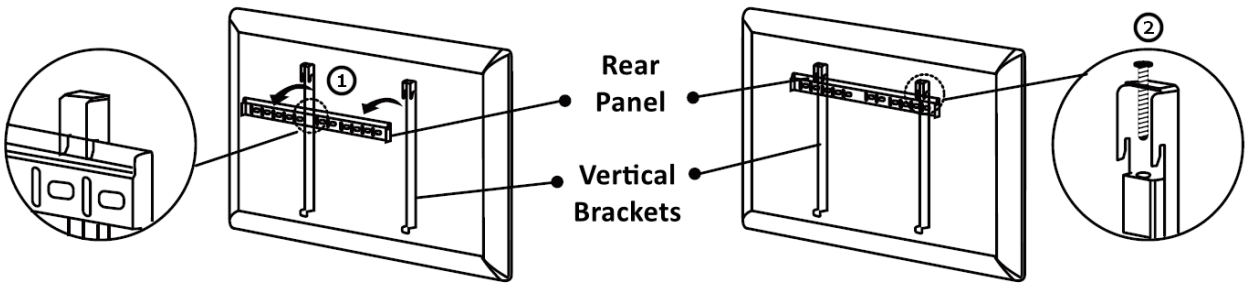

Figure 4-3 Hang the Device

Chapter 5 Startup and Shutdown

5.1 Device Startup

Connect the device to power supply, and it will start up automatically.

5.2 Shutdown

You can directly switch off the power, or press and hold the power-off button on the remote control to shut down the device.

Note

After pressing the power-off button on the remote control without unplugging the power supply, you can click

on the remote control to start up the device.

Chapter 6 Device Operation

Scan the QR code to get the device operation details.

Figure 6-1 User Manual QR Code

See Far, Go Further

UD39979B-E