Conventional Fire Alarm Control Panel

User Manual

Legal Information

About this Document

- This Document includes instructions for using and managing the Product. Pictures, charts, images and all other information hereinafter are for description and explanation only.
- The information contained in the Document is subject to change, without notice, due to firmware updates or other reasons. Please find the latest version of the Document at the Hikvision website (***https://www.hikvision.com***). Unless otherwise agreed, Hangzhou Hikvision Digital Technology Co., Ltd. or its affiliates (hereinafter referred to as "Hikvision") makes no warranties, express or implied.
- Please use the Document with the guidance and assistance of professionals trained in supporting the Product.

About this Product

- This product can only enjoy the after-sales service support in the country or region where the purchase is made.

Acknowledgment of Intellectual Property Rights

- Hikvision owns the copyrights and/or patents related to the technology embodied in the Products described in this Document, which may include licenses obtained from third parties.
- Any part of the Document, including text, pictures, graphics, etc., belongs to Hikvision. No part of this Document may be excerpted, copied, translated, or modified in whole or in part by any means without written permission.
- HIKVISION and other Hikvision's trademarks and logos are the properties of Hikvision in various jurisdictions.
- Other trademarks and logos mentioned are the properties of their respective owners.

LEGAL DISCLAIMER

- TO THE MAXIMUM EXTENT PERMITTED BY APPLICABLE LAW, THIS DOCUMENT AND THE PRODUCT DESCRIBED, WITH ITS HARDWARE, SOFTWARE AND FIRMWARE, ARE PROVIDED "AS IS" AND "WITH ALL FAULTS AND ERRORS". HIKVISION MAKES NO WARRANTIES, EXPRESS OR IMPLIED, INCLUDING WITHOUT LIMITATION, MERCHANTABILITY, SATISFACTORY QUALITY, OR FITNESS FOR A PARTICULAR PURPOSE. THE USE OF THE PRODUCT BY YOU IS AT YOUR OWN RISK. IN NO EVENT WILL HIKVISION BE LIABLE TO YOU FOR ANY SPECIAL, CONSEQUENTIAL, INCIDENTAL, OR INDIRECT DAMAGES, INCLUDING, AMONG

OTHERS, DAMAGES FOR LOSS OF BUSINESS PROFITS, BUSINESS INTERRUPTION, OR LOSS OF DATA, CORRUPTION OF SYSTEMS, OR LOSS OF DOCUMENTATION, WHETHER BASED ON BREACH OF CONTRACT, TORT (INCLUDING NEGLIGENCE), PRODUCT LIABILITY, OR OTHERWISE, IN CONNECTION WITH THE USE OF THE PRODUCT, EVEN IF HIKVISION HAS BEEN ADVISED OF THE POSSIBILITY OF SUCH DAMAGES OR LOSS.

- YOU ACKNOWLEDGE THAT THE NATURE OF THE INTERNET PROVIDES FOR INHERENT SECURITY RISKS, AND HIKVISION SHALL NOT TAKE ANY RESPONSIBILITIES FOR ABNORMAL OPERATION, PRIVACY LEAKAGE OR OTHER DAMAGES RESULTING FROM CYBER-ATTACK, HACKER ATTACK, VIRUS INFECTION, OR OTHER INTERNET SECURITY RISKS; HOWEVER, HIKVISION WILL PROVIDE TIMELY TECHNICAL SUPPORT IF REQUIRED.
- YOU AGREE TO USE THIS PRODUCT IN COMPLIANCE WITH ALL APPLICABLE LAWS, AND YOU ARE SOLELY RESPONSIBLE FOR ENSURING THAT YOUR USE CONFORMS TO THE APPLICABLE LAW. ESPECIALLY, YOU ARE RESPONSIBLE, FOR USING THIS PRODUCT IN A MANNER THAT DOES NOT INFRINGE ON THE RIGHTS OF THIRD PARTIES, INCLUDING WITHOUT LIMITATION, RIGHTS OF PUBLICITY, INTELLECTUAL PROPERTY RIGHTS, OR DATA PROTECTION AND OTHER PRIVACY RIGHTS. YOU SHALL NOT USE THIS PRODUCT FOR ANY PROHIBITED END-USES, INCLUDING THE DEVELOPMENT OR PRODUCTION OF WEAPONS OF MASS DESTRUCTION, THE DEVELOPMENT OR PRODUCTION OF CHEMICAL OR BIOLOGICAL WEAPONS, ANY ACTIVITIES IN THE CONTEXT RELATED TO ANY NUCLEAR EXPLOSIVE OR UNSAFE NUCLEAR FUEL-CYCLE, OR IN SUPPORT OF HUMAN RIGHTS ABUSES.
- IN THE EVENT OF ANY CONFLICTS BETWEEN THIS DOCUMENT AND THE APPLICABLE LAW, THE LATTER PREVAILS.

© Hangzhou Hikvision Digital Technology Co., Ltd. All rights reserved.

Applicable Model

Product Name	Product Model
Conventional Fire Alarm Control Panel (hereinafter referred to as FACP)	HF-C102/HF-C104/HF-C108

Foreword

The purpose of this instruction manual is to ensure that users will use this product safely and correctly, without causing property damage. Before using this product, please carefully read the product instruction manual and retain the manual for future reference.

Symbol Conventions

The symbols that may be found in this document are defined as follows.

Symbol	Description
Note	Provides additional information to emphasize or supplement important points of the main text.
Caution	Indicates a potentially hazardous situation which, if not avoided, could result in equipment damage, data loss, performance degradation, or unexpected results.
Danger	Indicates a hazardous situation which, if not avoided, will or could result in death or serious injury.

Safety Instruction

Danger

- It is a Class B product. In the living environment, the product may cause radio interference. In this case, the user may be required to take practical steps to interfere.
- During product installation and use, the electrical safety regulations of the country and area must be strictly observed.
- The plug or socket of the device is the device that disconnects the power supply. Do not block the plug or plug it in.
- Do not connect more than one product to the same power adapter (it may cause excessive heat or fire if the adapter is overloaded).
- Make sure to disconnect the product power supply during wiring, disassembling, etc., and do not power on the device.
- When installing the product on a wall or ceiling, fix the product firmly.
- To avoid heat build-up, keep the device ventilated.
- If product smoke occurs, it may cause odor, or sound noise. Turn off the power supply and unplug the power cable. Please contact the distributor or service center.
- If the product is not working normally, please contact the store or nearest service center of the device. Do not disassemble or edit the product in any way. (The Company shall not be responsible for problems caused by unauthorized editing or repair).

Caution

- In the use of the product, you must be in strict compliance with the electrical safety regulations of the nation and region.

- CAUTION: Replace the fuse only with the same model to reduce the risk of fire or electric shock.
- The device must be connected to an earthed mains socket-outlet.
- This device is not suitable for use in locations where children are likely to be present.
- CAUTION: Risk of explosion if the battery is replaced by an incorrect type.
- Improper replacement of the battery with an incorrect type may defeat a safeguard (for example, in the case of some lithium battery types).
- Do not dispose of the battery into fire or a hot oven, or mechanically crush or cut the battery, which may result in an explosion.
- Do not leave the battery in an extremely high temperature surrounding environment, which may result in an explosion or the leakage of flammable liquid or gas.
- Do not subject the battery to extremely low air pressure, which may result in an explosion or the leakage of flammable liquid or gas.
- Dispose of used batteries according to the instructions.
- The additional force shall be equal to three times the weight of the device but not less than 50 N. The device and its associated mounting means shall remain secure during the installation. After the installation, the device, including any associated mounting plate, shall not be damaged.
- Do not touch the sharp edges or corners.

Note

Qualifications for installation, maintenance, and repair personnel:

- The device shall not be exposed to water dripping or splashing, and no objects filled with liquids, such as vases, shall be placed on the device.
- Ensure correct voltage and wiring of the terminals for connection to mains supply.
- No naked flame sources, such as lighted candles, should be placed on the device.
- The USB port of the device is used for connecting to USB flash drive only. The current for the connected device shall be not more than 0.1 A.
- The serial port of the device is used for debugging only.
- Install the device according to the instructions.
- To prevent injury, this device must be securely attached to the installation surface in accordance with the installation instructions.
- Keep upright when moving or using the device.
- The device external wiring connected to the hazardous live terminals requires installation by an instructed person.
- Make sure that the power has been disconnected before you wire, install, or disassemble the device.
- The power supply or device must be connected to an earthed mains socket-outlet.
- High voltage for the power supply. Do not disassemble it.
- If smoke, odor, or noise arises from the power supply or device, immediately turn off the power, unplug the power cable, and contact the service center.
- If the device needs to be wired by yourself, select the corresponding wire to supply power according to the electric parameters labeled on the device. Strip off wire with a standard wire stripper at corresponding position. To avoid serious consequences, the length of stripped wire shall be appropriate, and conductors shall not be exposed.

Contents

Chapter 1 Product Introduction 1
1.1 Product Description 1
1.2 Main Features 1
1.3 Appearance of Front Board 2
1.3.1 Main Board Description 3
1.4 Internal Structure Introduction 6
1.4.1 Internal Structural Components Description 6
1.4.2 Power Area Component Description 8
Chapter 2 Wiring and Installation 9
2.1 Wiring 9
2.1.1 Wiring Requirements 9
2.1.2 Wiring Description 10
2.2 Installation 14
2.2.1 Installation Precautions 14
2.2.2 Unpacking Check 14
2.2.3 Wall Mounted Installation 15
Chapter 3 Debugging and Use 16
3.1 Debugging 16
3.1.1 Preparation 16
3.1.2 Power on and Self-Test 16
3.1.3 Alarm Test 17
Chapter 4 Operation and Configuration 18
4.2 Basic Operation Introduction 18
4.2.1 Power on/Shutdown Description 18
4.2.2 Operation Permission Description 19
4.2.3 Fire Alarm 19
4.2.4 Enable/Disable Zone Alarm 19
4.2.5 Fire Pre-alarm 20
4.2.6 Mute 20
4.2.7 Reset 20
4.2.8 Fault Alarm 21
4.2.9 RS485 Networking 21
4.2.10 Update Firmware by U Disk 23
4.2.11 Export Log by U Disk 23
4.2.12 Total Loss of the Power Supply 23
4.2.13 Output to Fire Alarm Devices 23
Chapter 5 Maintenance Management 24
5.1 Daily Maintenance Management 24
A. Simple Fault Handling Methods 25
B. Dimension Drawing 26
C. Specification 27
D. Packing List 28

Chapter 1 Product Introduction

1.1 Product Description

This product is suitable for fire detection and security alarm. It can match various peripherals such as smoke detector, heat detector sounder strobe and manual call point to form a protection system. Once an alarm (manual alarm) is detected, it can be immediately sent to the alarm to the platform. It can be widely used in dormitories, public rental housing, nursing homes, Taoist temples, temples, farmers markets, high-rise buildings, factories, and small and medium-sized scenes with concentrated protection areas.

1.2 Main Features

- Maximum 2 zone 64 nodes loading capacity for HF-C102, maximum 4 zone 128 nodes loading capacity for HF-C104, maximum 8 zone 256 nodes loading capacity for HF-C108.
- Rich interface design (I/O, alarm bell, RS485, LAN, WLAN, etc.).
- Ultra-slim cabinet design with hidden hinges, supporting wall mounting and built-in installation, stylish and attractive.
- Exclusive flame alarm light, paired with an 85dB high-tone buzzer, offering a refreshing audio-visual alert experience.
- Easy of use: The alarm is displayed in English, which is intuitive and clear, and the signal strength is indicated, which is easy to install.
- Supports manual alarm, automatic warning, and multi-level management modes for automatic alarms, easily handling various emergencies.
- The box comes with built-in multi-dimensional debugging functions, making the status visible and maintenance convenient.

1.3 Appearance of Front Board

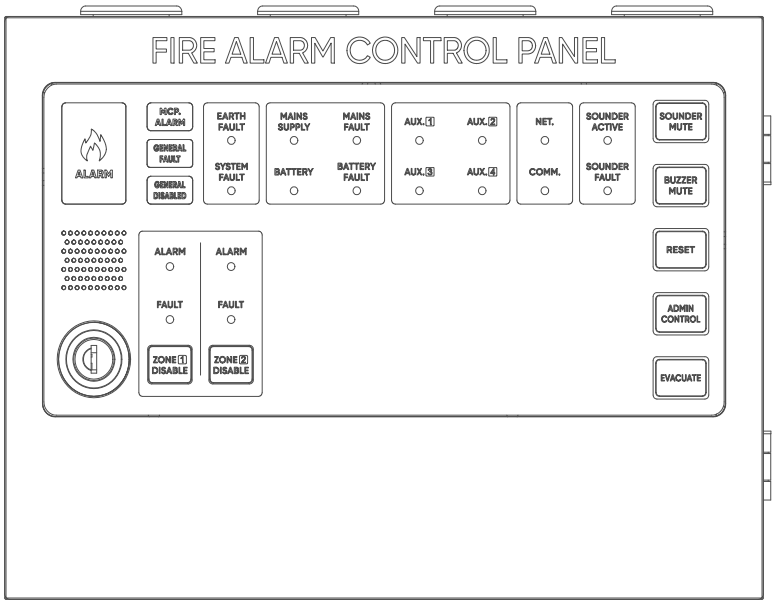

Figure 1-1 Front Board of HF-C102

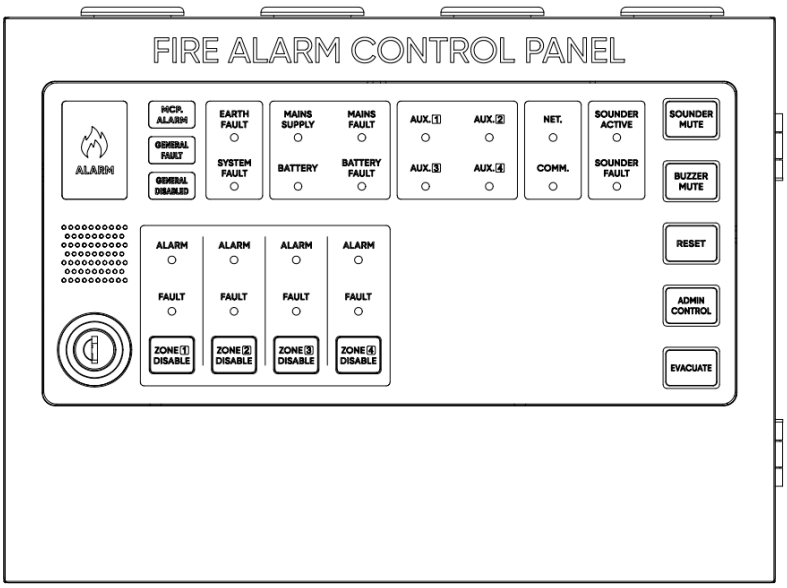

Figure 1-2 Front Board of HF-C104

Note

The product images in this manual are all schematic diagrams, please refer to the actual product.

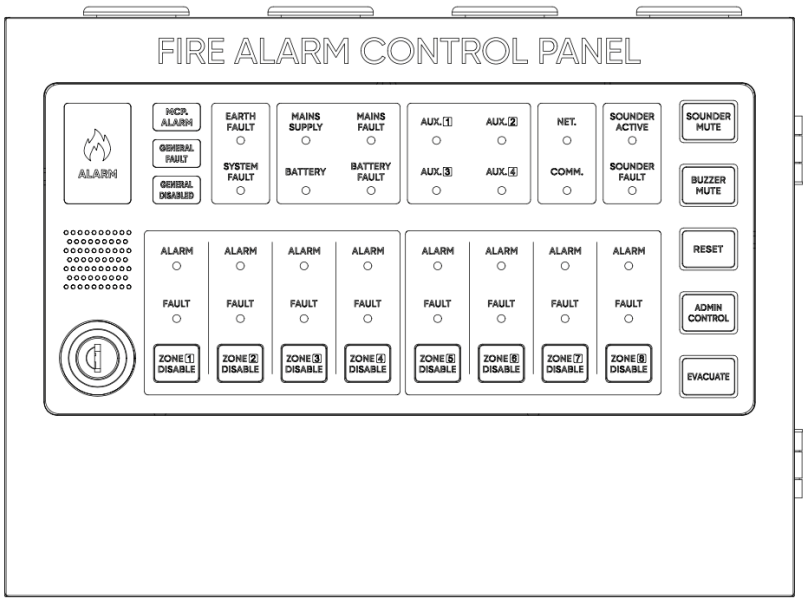

Figure 1-3 Front Board of HF-C108

Note

The product images in this manual are all schematic diagrams, please refer to the actual product.

1.3.1 Front Board Description

The front board mainly includes indicator lights, buzzers, lock, function buttons and zone buttons.

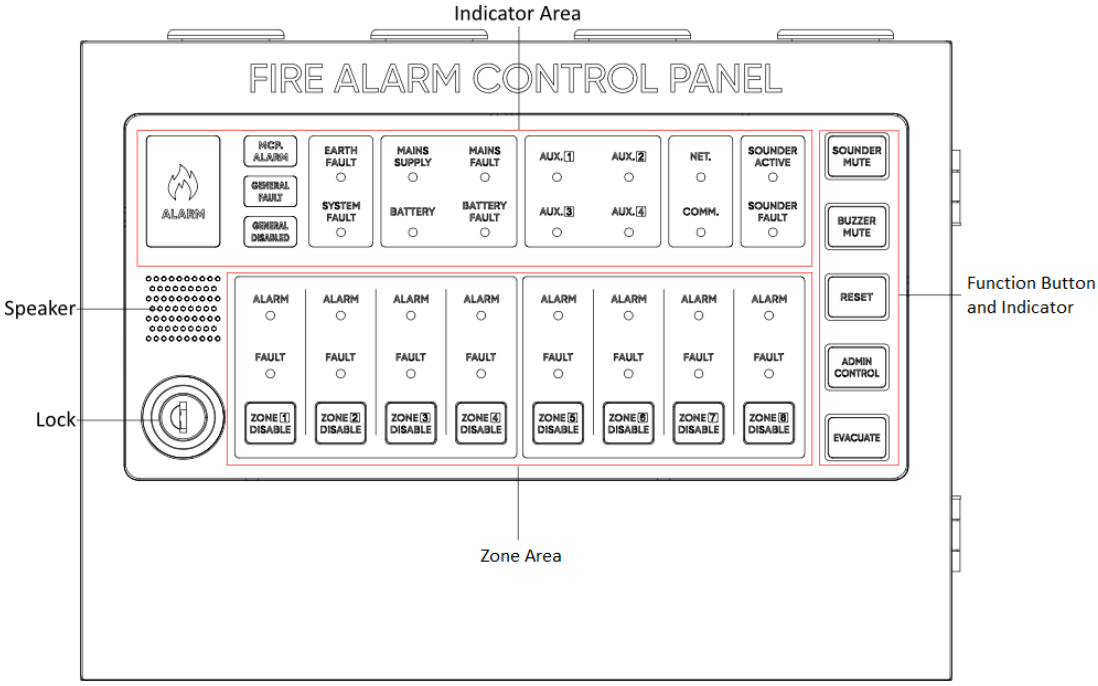

Figure 1-4 Front Board

Lock Description

Authorized professionals can unlock the controller's front panel to perform operations such as power on/off, wiring, and backup power replacement.

Indicator Description

Table 1-1 Indicator Description

Indicator	Action	Status Description
ALARM	On	Receive a fire alarm signal
	Flash	Early warning
	Off	No fire alarm
MCP ALARM	On	Manual call point triggers fire alarm.
	Off	No fire alarm for manual call point.
GENERAL FAULT	On	There is fault.
	Off	There is no fault.
GENERAL DISABLED	On	Some zones or grounding-detection are disabled.
	Off	No zones and grounding-detection are disabled.
EARTH FAULT	On	Grounding is abnormal.
	Off	Grounding is normal.
MAINS SUPPLY	On	Always on during main power supply.
	Off	No main power supply.
BATTERY	On	Always on during spare power supply.
	Off	No spare power supply.
MAINS FAULT	On	Main power is abnormal.
	Off	Main power is normal.
BATTERY FAULT	On	Spare power is abnormal.
	Off	Spare power is normal.
AUX.1/AUX.2/AUX.3/AUX.4	On	There is external signal access.
	Off	There is no external signal access.

Indicator	Action	Status Description
NET.	On	The device is networking.
	Off	Disabled.
	Flash	The device is in cloud data communication via LAN/WLAN.
COMM.	On	The devices are working.
	Off	Disabled.
	Flash	RS485 interface is communicating.
SOUNDER ACTIVE	On	There is sounder.
	Off	No sounder.
SOUNDER FAULT	On	Sounder is abnormal.
	Off	Sounder is normal.

*Note: Fault types include zone open circuit, zone short circuit; sounder open circuit, sounder short circuit; main power fault, backup power fault; grounding fault; communication fault; DC24V OUT short circuit.

ZONE Button and Function Button Description

Shortcut Button Description

Table 1-2 Zone Button Description

Quick Button	Function Description
[ZONE X DISABLE]	In Level 2, when a zone is active, short press the zone X disable button to disable the zone (steady LED); press it again to reactivate it (LED turns off). In Level 3, hold both the reset button and zone X disable button (ZONEx) while the zone is active to enter test mode (LED flashes). Exit test mode by pressing the reset button or automatically during a fire alarm.
[SOUNDER MUTE]	In Level 2, short press the sounder mute button to mute the alarm bell (steady LED). Short press it again to restore normal alarm bell function (LED turns off).
[BUZZER MUTE]	When the buzzer is active, short press the buzzer mute button to mute the controller (steady LED). The buzzer automatically reactivates (LED turns off) when new events are detected.

Quick Button	Function Description
[RESET]	In Level 2, short press the reset button to reset the controller (LED lights for 3 seconds, then turns off to confirm completion). Long press the button for 3 seconds to run the controller self-check.
[ADMIN CONTROL]	Short press the admin control button to enter Level 2 (steady LED). While in Level 2, hold both the admin control button and buzzer mute button together to upgrade to Level 3 (flashing LED). To exit: long press the admin control button for 3 seconds (LED turns off) or wait 30 minutes for automatic exit (LED turns off).
[EVACUATE]	In Level 3, short press the evacuate button to activate the alarm bell (steady LED). The bell stays on until you reset the controller.

Buzzer Status Description

Table 1-3 Buzzer Status Description

Device Status	Buzzer Status
Fire Alarm	Beep repeatedly in a circle period
Fault Alarm	A long beep

1.4 Internal Structure Introduction

1.4.1 Internal Structural Components Description

The internal structural components of the controller mainly consist of the main board, buzzer, battery, power module, power wiring internal, internal board and net port.

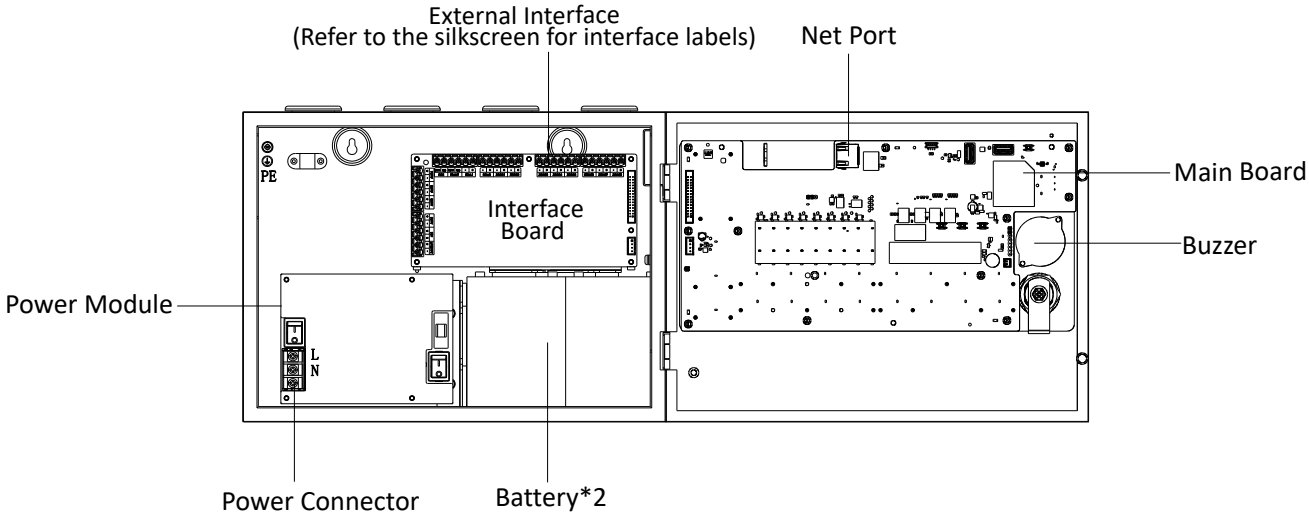

Figure 1-5 Internal Structural Components

Table 1-4 Internal Structural Components Description

Components	Description
Net Port	Connect the controller to Ethernet and transmit data with the platform.
Internal Board	Including RS485, 24 V out, zone interface, auxiliary power interface, fire alarm relay out, fault relay out and fire bell out.
USB Port	Insert U disk to upgrade, import and export.
Battery	Main power connection, batter power connection and change, switch of main power and batter power.
Power Wiring Internal	
Power Module	

1.4.2 Power Area Component Description

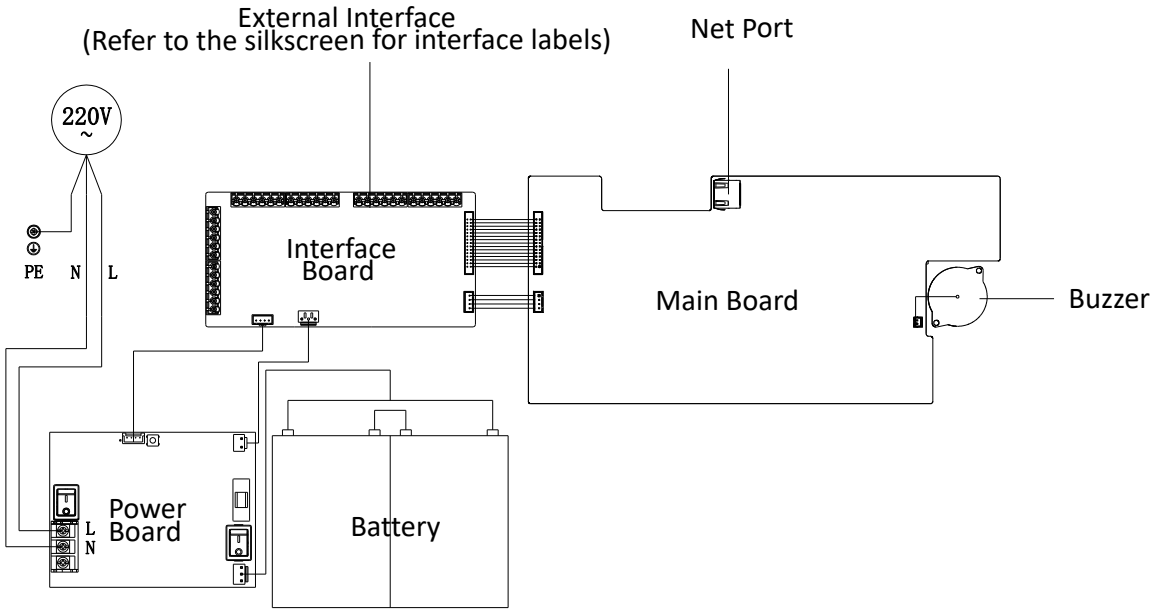

Figure 1-6 Power Supply Area Component

Table 1-4 Power Supply Area Component Description

Part	Description
Battery	Connect backup power supply. Two spare power supply (2200 mA*h / 12 V (2 pcs)). Refer to ***Spare Power Supply Wiring Description*** for the backup power connection.
Power Board	Access AC 110 V ~ 240V / 50 Hz ~ 60 Hz fire power supply.
Main Power Switch	When the "-" terminal is pressed, the main power will be enabled. When the "O" terminal is pressed, the main power will be disabled.
Spare Power Switch	When using spare power only, press the switch to enable the spare power. Note Use this function with care. When the battery is used up, the battery cannot be charged.

Chapter 2 Wiring and Installation

2.1 Wiring

2.1.1 Wiring Requirements

⚠Danger

Electric shock risk. Disconnect all power sources during wiring, installation, and repair.

Please follow the following wiring requirements for device wiring:

Cable and Wiring Requirements

- Wiring should comply with the construction drawing and relevant regulations.
- Wires with different voltages and types should not be co-managed.
- The circuit bus can use fire-retardant twisted pair or fire-retardant twisted pair. In consideration of route construction requirements, it is recommended that the user should use a twisted-link engineering line with a section area ≥ 1.5 mm^2.
- The voltage between the fire protection bus ZONE + and the fire protection bus ZONE - should be greater than 18 V.
- It is recommended to use bus or fishbone structure for wiring, and try to avoid multi-level branch and one point.
- When wiring, it is recommended to set the same wire color and permanent ID at the node terminal for subsequent maintenance.
- RS-485 bus recommends the use of RVS2 × 1.5 mm^2 twisted pair with a communication distance of less than 500 m.

Grounding Requirements

Make sure the device is grounded and the ground resistance value meets the following requirements:
Grounding wire: Use a 4 mm^2 copper wire with a grounding resistance of less than 4 Ω.

2.1.2 Wiring Description

Danger

- The cable connection mode should be connected according to the electrical method of the sales area.
- The connection should be operated by a professional. Disconnect all the power sources.
- When power connection, the protective ground of the device should be connected to the protective ground of the building device.

Terminal Wiring Description

Terminal Description

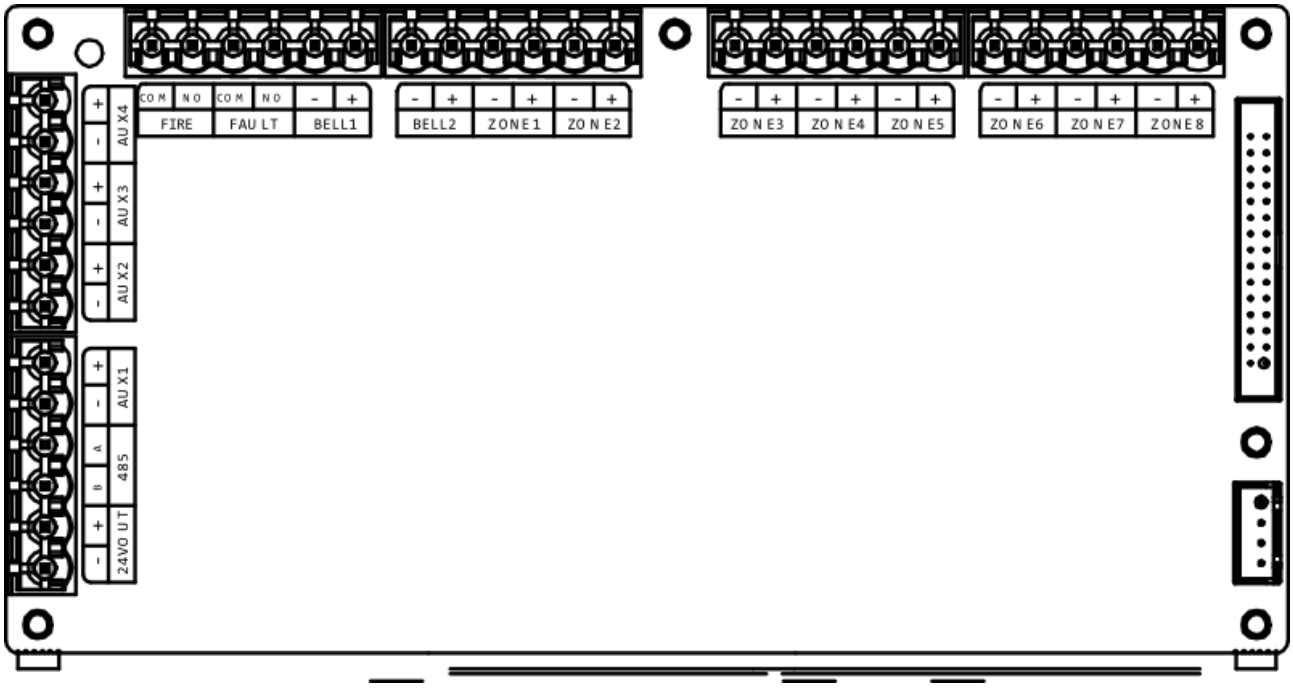

Figure 2-1 Terminal Description

Table 2-1 Main Control Terminal Definition Table

Terminal ID		Terminal Description
FIRE	COM	The relay is closed when the controller receives fire /fault signal. NC or NO can be selected by short circuit cap. It is set as NO
	NO	
FAULT	COM	

Terminal ID		Terminal Description
	NO	by default. Note Relay output is normally open by default and the electrical specification is 30 V, 1A.
485	A	RS-485 interface, connect device supporting RS-485 communication.
	B	
24 V OUT	+	Reserve one 500mA 24V power output to drive the on-site equipment. Note Electrical specification is 24V-27.5V, 0.5 A.
	-	
AUX1/ AUX2/ AUX3/ AUX4	+	Supports 4-channel sensors signal input.
	-	
BELL 1/BELL 2	+	Reserve two fire alarm output lines, with a 15W maximum output power supply; The fire alarm output interface needs to be able to detect wires and determine if they are open-circuited, short-circuited, or normal.
	-	
ZONE(1~8)	+	Reserve 2/4/8 ZONE interfaces for HF-C102/HF-C104/HF-C108; Connect to smoke detector, heat detector, manual call point, etc. The interfaces can detect short circuit, open circuit, and normal status; Each interface can be connected to a maximum of 32 non-coded nodes (excluding sounder strobe and alarm bell).
	-	

Internal Wiring

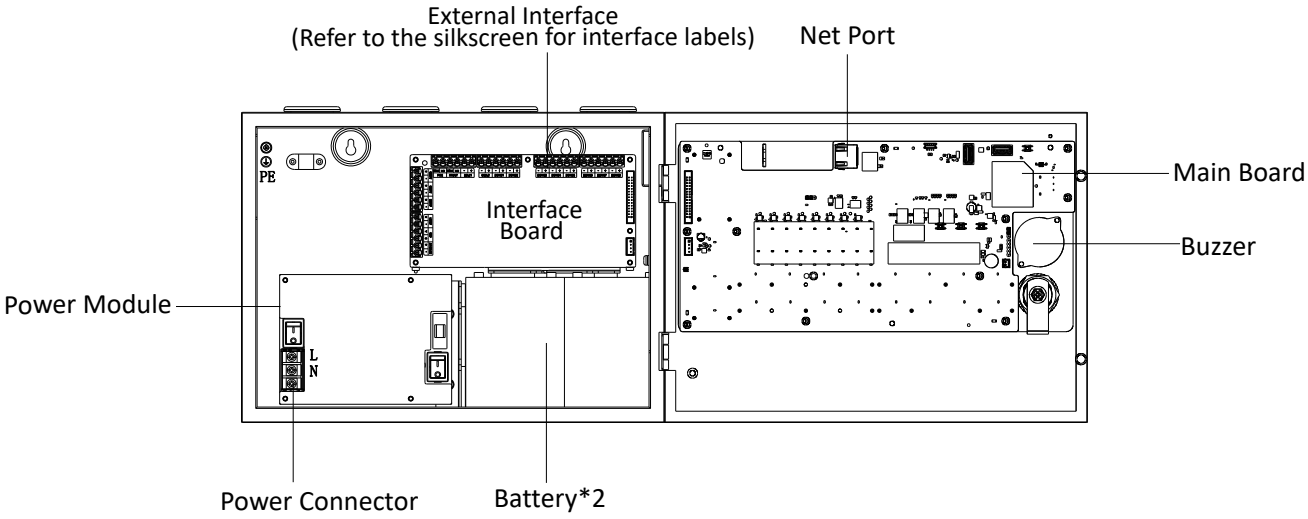

Figure 2-2 Internal Wiring

Spare Power Supply Wiring Description

If the standby power is not installed, the standby power supply should be connected according to the following pattern.

Caution

When power is only used on backup power supply, please disconnect the backup power after the end of use and charge the battery immediately. Battery cannot be charged when the battery power is used up.

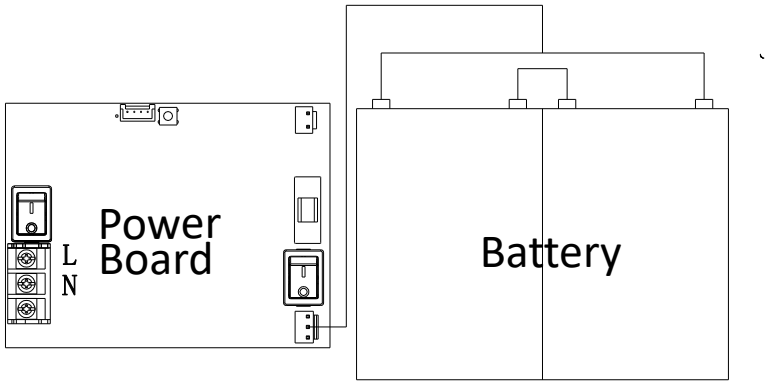

Figure 2-3 Spare Power Wiring

Main Power Supply Wiring Description

Access AC 110 V~ 240 V fire power supply via power terminal. L access line, N access line, and PE ground. Use a flame-retardant 3-core insulated wire with a withstand voltage of more than 500V,

wire gauge 0.75㎜².

Note

- The protective ground of the device should be connected to the protective ground of the building device.
- The external wire connected to the hazardous live terminal should be installed by a trained person.

Fire wire and wire terminal are operated by a driver. The ground wire terminal is connected to the ground wire installation hole by using a pen or driver.

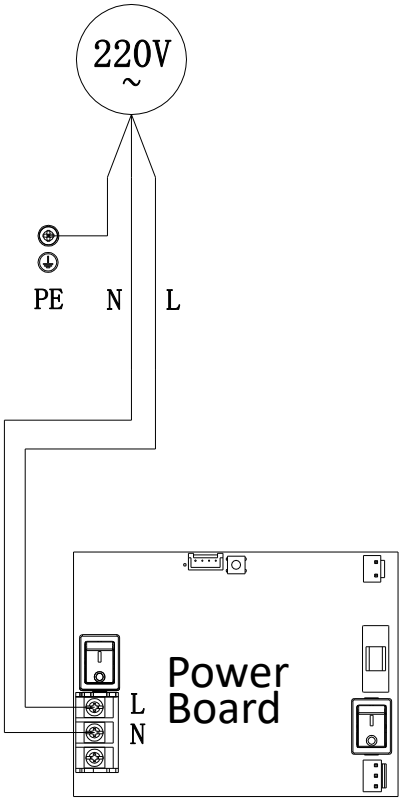

Figure 2-4 Main Power Terminal

Wiring Typology

The wiring between control panel and detectors and alarms is shown in the figure below.

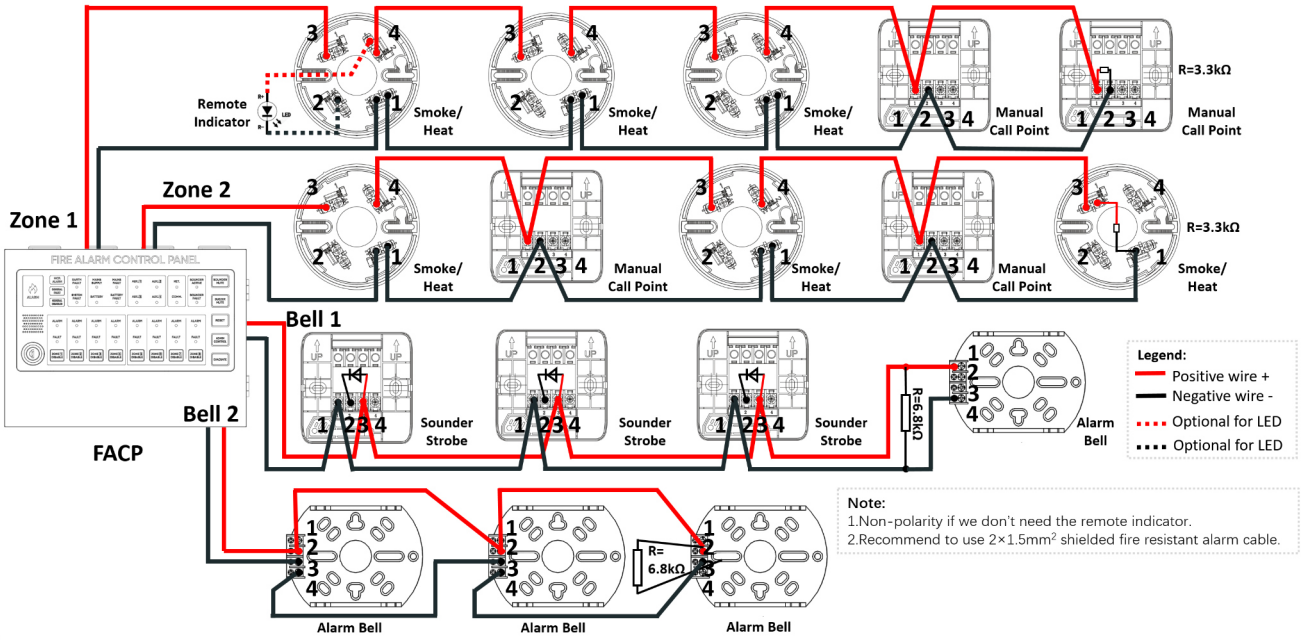

Figure 2-5 Wiring Typology

2.2 Installation

2.2.1 Installation Precautions

Danger

Electric shock risk. Disconnect all power sources during wiring, installation, and repair.

Note

- When installing and replacing battery power, the battery with the wrong model will be in danger of explosion. Backup Power Supply Specification: 2200 mA*h / 12 V (2 pcs). Handle the used batteries according to the instructions.
- The wall should be of a certain thickness and be able to withstand at least 4 times the total weight of the device and installation accessories.
- The conventional fire alarm control panel receives main power from AC 110 V to 240 V supply.
- Carry out self-test to check whether all parts are successfully inspected.
- The conventional fire alarm control panel supports wall-mounted installation. It should be installed in the fire control room or place where people are on duty. Keep away from the environment with electromagnetic interference.
- The design should be strictly implemented in accordance with relevant provisions and regulations, and connect the device correctly according to the construction drawing.
- During the system debugging process, please do not remove the dust cover of the device in advance to avoid false alarms during the debugging process.

2.2.2 Unpacking Check

After the controller enters the site, unpack the box first. The contents include:

- Check if device components, tools, accessories, spare parts, manuals, and other technical documents are complete according to the packing list.
- Check if the device appearance, component, etc. are rusted or damaged.

Note

After unpacking, the spare parts, accessories, tools, etc. that do not need to be installed should be properly packed and kept, handed over together to prevent loss, and detailed inspection records should be made. Picture or picture the damage or rust.

2.2.3 Wall Mounted Installation

Steps

1. Choose suitable place with convenient height for visual and manual access to conventional fire alarm control panel.
2. Drill two holes on the wall and screw bolts.

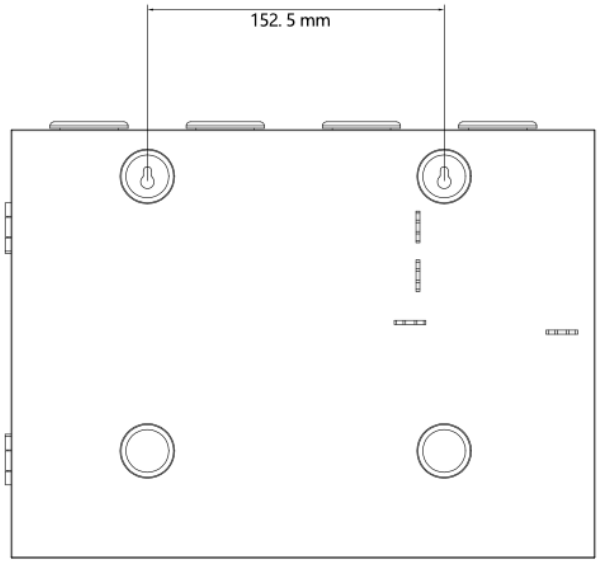

Figure 2-5 Installation Dimension

3. Place the cabinet over the four bolts.
4. Open cabinet, tighten all two bolts securely against the back wall of the cabinet.

Chapter 3 Debugging and Use

3.1 Debugging

After connecting and installing, the device should be debugged to check device status.

3.1.1 Preparation

Before debugging the device, please check if device installation and wiring are in compliance with the requirements according to the following list.

- Check if system installation meets design requirements according to system design drawing.
- Check system route status, handle wrong line, open line, short circuit, etc., and make sure the route is normal.
- Whether the system line-to-ground insulation resistance and system grounding meet the requirements of the Fire Alarm System Construction and Acceptance Standard. The ground-to-ground insulation resistance should be no less than 20 MΩ. The ground resistance of special grounding time pair should be no more than 4 Ω. The ground resistance of joint grounding time pair should be no more than 1 Ω.
- Check if the device is powered on by stand-alone device, and the device can be debugged after normal operation.

3.1.2 Power on and Self-Test

When the FACP is powered on for the first time, it enters the power-on self-test state, with a detection time of 10 seconds. The buzzer beeps to indicate the time. Within 10 seconds, it needs to check for zone open circuit, zone short circuit, bell output open circuit, bell output short circuit, buzzer output, all indicators, main power fault, backup power fault, and grounding fault. After 10 seconds, if the device is normal, it will exit the self-test and indicate the current status. If there is a fault with the device, it will provide corresponding audio-visual fault prompts.

Note

If the FACP is powered on, it will be operated self-test. If you want to enter self-test mode, you can press ADMIN CONTROL and RESET button for a while.

During the self-test mode, all indicators light up. After 5s, indicators turn off and FACP enters standby mode.

3.1.3 Alarm Test

You can press EVACUATE button (in Level 3) to simulate alarms. During testing, the EVACUATE indicator lights up, the ALARM indicator lights up, the buzzer outputs a fire alarm sound, and the alarm output interface is activated. You can clear the simulated alarm information through the RESET button (in Level 2). During testing, if a real fire occurs, the controller indicates the fire alarm information.

Chapter 4 Operation and Configuration

4.2 Basic Operation Introduction

4.2.1 Power on/Shutdown Description

Power on

There are two ways to power on:

Battery Power on: Turn on the battery power switch 2 to be on and press battery power switch 1 for a while.

Main Power on: After connecting the adaptor, turn on the main power switch to be on.

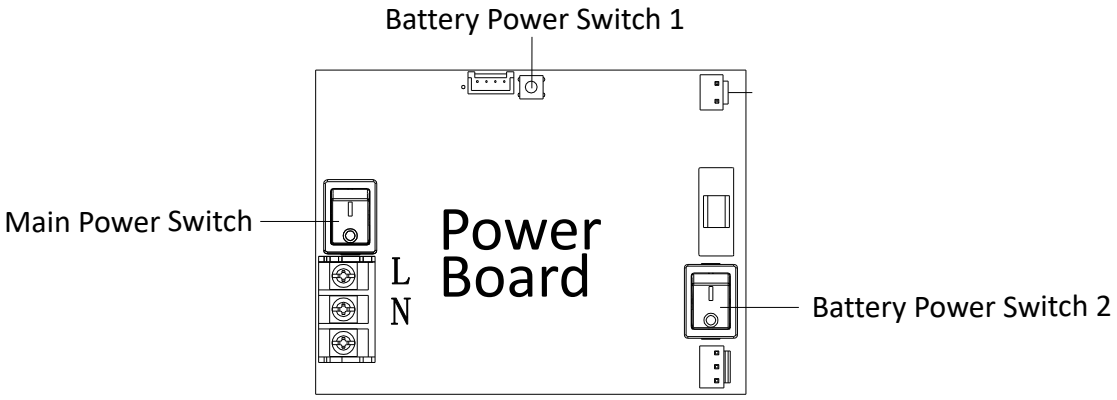

Figure 4-1 Power Switch

Result Description

Initialize the power-on after power-on on the system. After initializing, the startup program ends and the system enters normal standby status.

Shutdown

Note

In order to ensure the discharge time of the capacitor in the system, please wait 10 seconds before powering on.

There are two ways to power on:

1. Disable the battery power switch 2.
2. Disable main power switch.

Caution

Turn off the main and spare power of external device before disconnecting fire protection power supply.

4.2.2 Operation Permission Description

Four types of operation permission: Level 1, Level 2, Level 3 and Level 4. Different levels have different function permissions, you can refer to the ***Shortcut Button Description*** to get the details.

- Level 1: Start the device and automatically enter Level 1.
- Level 2: Short press ADMIN CONTROL button and the indicator is on, which means enter the Level 2.
- Level 3: Under Level 2, press ADMIN CONTROL and BUZZER MUTE together and the indicator flashes, which means enter Level 3.
- Level 4: Use the key to open the device to enter Level 4.

Long press the ADMIN CONTROL button for 3 seconds and indicator turns off for manual exit or wait 30 minutes and indicator turns off for automatic exit.

4.2.3 Fire Alarm

When there is a fire alarm signal input from a fire detector, the controller will issue fire alarm sound and light signals within 10 seconds: ALARM light is always on and buzzer is beeping in a circle period and the device will record the alarm time. If the zone detects the fire, the corresponding zone alarm light will be on.

4.2.4 Enable/Disable Zone Alarm

Support disabling operation on a single zone and indicate the current zone usage status. Press ZONEx DISABLE buttons to perform enable/disable operations. When disabled, the disable indicator light stays on; when enabled, the disable indicator light turns off.

Note

Abnormal state explanation: When disabled, the fire alarm indicator light is off, and the fault indicator light is off. If there are alarms and faults before disabled, the corresponding indicators are on.
Disable operation by zone should be performed under Level 2 or Level 3.

4.2.5 Fire Pre-alarm

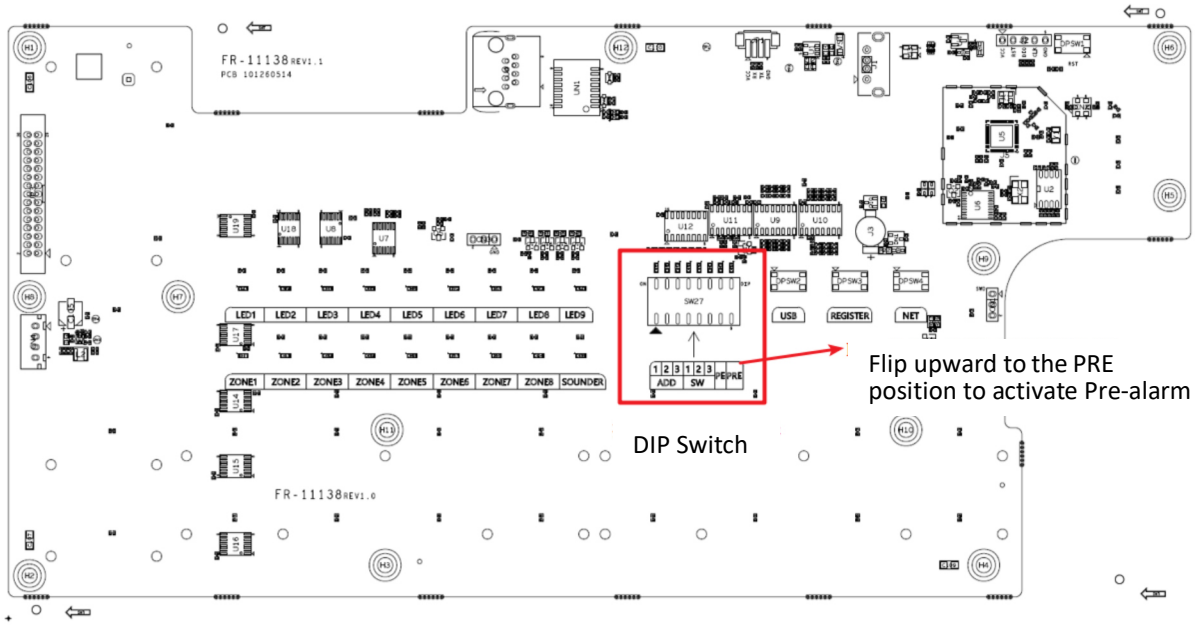

Figure 4-2 Pre-alarm Activation Method

The ZONE detectors can determine whether a fire alarm is triggered by smoke/temperature sensors or manual call points. If it is triggered by smoke/temperature sensors and the quantity is less than 2, it should be considered a pre-alarm, and the FACP enters the pre-alarm state, with the ALARM light flashing; when the quantity of triggered alarms is ≥ 2, FACP should change from a pre-alarm to a fire alarm. When the pre-alarm is cleared, it automatically exits the pre-alarm state. FACP will record the event information at the same time.

4.2.6 Mute

When there are fire alarm or fault events in the system, the FACP will trigger the alarm sound. You can press the BUZZER MUTE button to mute the controller and press the SOUNDER MUTE to mute the alarm bell, then the light of the button will be yellow.

Note

Fire alarm sound signals do not link to eliminate, each new zone during the alarm should reissue sound indication.

4.2.7 Reset

The reset function will restore FACP and other devices (detectors, manual call point, etc.) that can be linked and

it can be performed under Level 2 or Level 3.
When the alarm is triggered, press RESET button, the FACP will reset from the fire status and the light of the RESET button will be green.

4.2.8 Fault Alarm

Table 4-1 Fault Description

Fault Type	Description
System Fault	When the system software is abnormal, the SYSTEM FAULT light will be on.
Battery Power Fault	When the battery power is missing or under voltage, the BATTERY FAULT light will be on and the buzzer is beeping all the time.
Main Power Fault	When the main power is lost, the MAINS FAULT light will be on and the buzzer is beeping all the time.
Sounder Fault	When there is a short circuit or open circuit in the cable connected to the alarm bell interface, the SOUNDER FAULT will be on and the buzzer is beeping all the time.
Earth Fault	When there is a grounding issue with the external cables, it will cause the device to operate abnormally and the EARTH FAULT light will be on and the buzzer is beeping all the time. Grounding Test: 1. Connect the short cap of triple rows pin on the EARTH to pin 1 and pin2. 2. Check if the indicator of Earth Fault on the main board is on. 3. Switch to PE mark to disable the grounding test.
Zone Fault	When the interface connected to the external device exists short circuit or disconnection, the FAULT light in the zone will be on and the buzzer is beeping all the time.

4.2.9 RS485 Networking

Realize the networking of RS485 main and sub devices.
Prerequisite:
Dial switch is set.

Switch Dial

Only ADD 123 are used for the main-sub configuration.

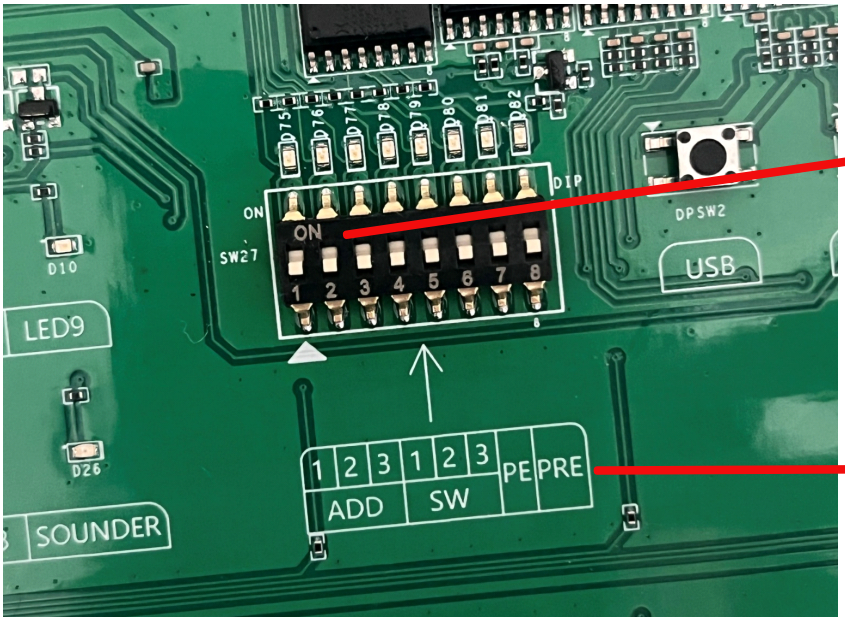

SWITCH: 000
OFF: 0
ON: 1
The binary system is used for numbering.

ADD(123): Main-sub
SW(123): Reserved

PE: Switch to ON to enable ground/shield selection.

PRE: Switch to ON to enable the warning function.

Figure 4-3 Dial Switch 1

	DIP Switch		
	1	2	3
	Mian-sub Address		
	x	x	x
FACP 0	0	0	0
FACP 1	1	0	0
FACP 2	0	1	0
FACP 3	1	1	0
FACP 4	0	0	1
FACP 5	1	0	1
FACP 6	0	1	1
Invalid	1	1	1

Figure 4-4 Dial Switch 2

Steps

1. Use the key to open the chassis and complete the configuration of main-sub mode on the main board.
2. Connect the main and sub devices through RS485A and RS485B terminals.

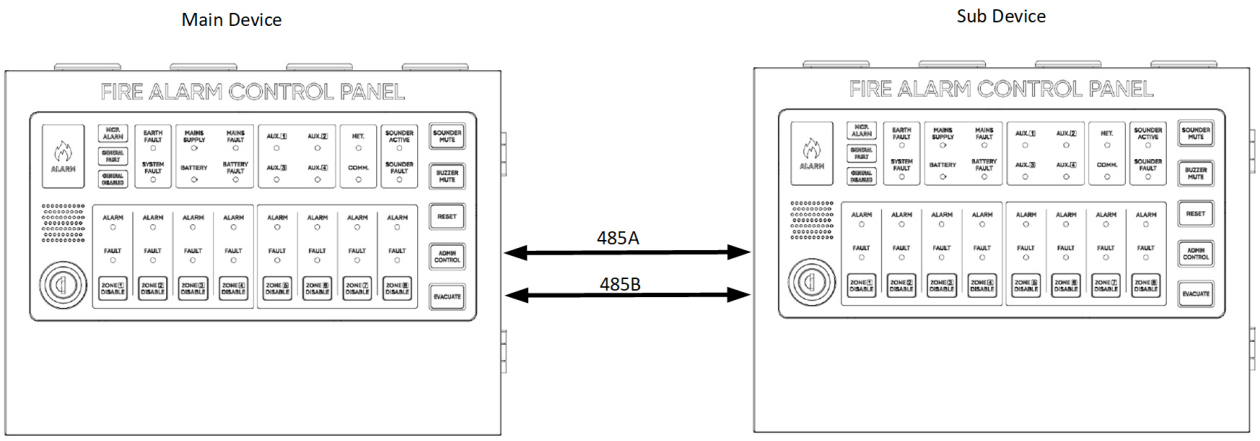

Figure 4-5 Main and Sub Device Connection

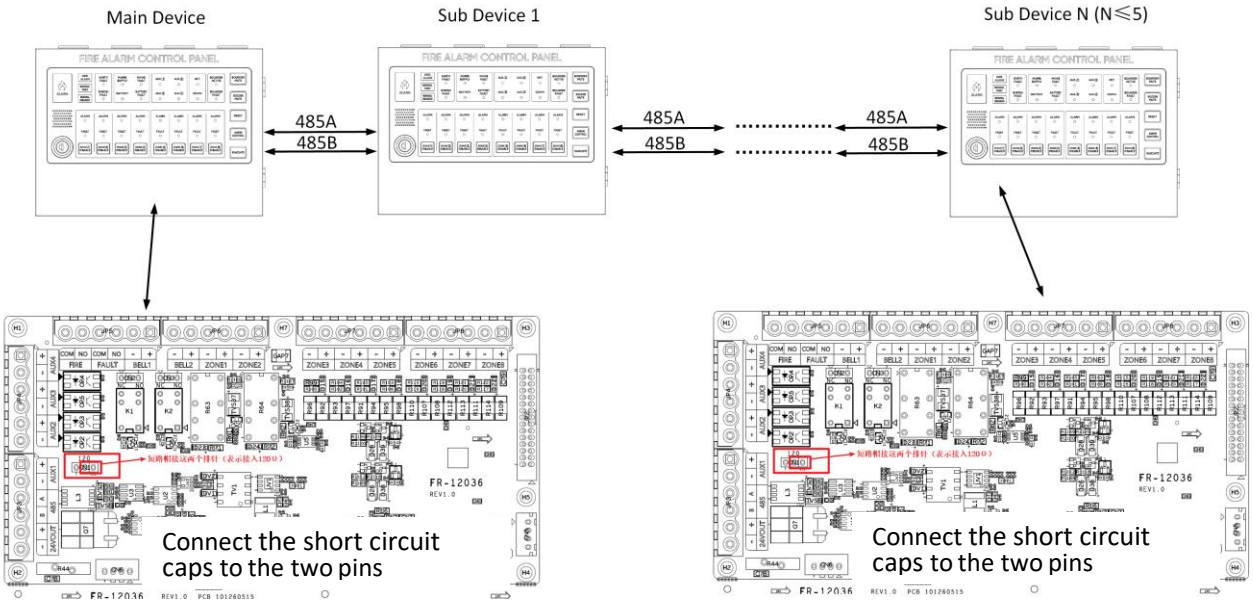

Figure 4-6 Main and Sub Devices Connection

3. Press ADMIN CONTROL button to enter the level 2.
4. Press the REGISTER button on the main board to enter the main-sub registration.
5. The LED 8 and LED 9 are always on, indicating that the registration process has begun.
6. After the registration is completed, the lights are off and the control panel returns to standby state.

Note

When RS485 interface connects to a main device and a sub device, the devices do not connect to terminal resistor of 120 Ω. When RS485 interface connects to a main device and several sub devices, change the short circuit caps of the main device and the last sub device to the pin 1 and pin 2 in order to connect to terminal resistor of 120 Ω.

4.2.10 Update Firmware by U Disk

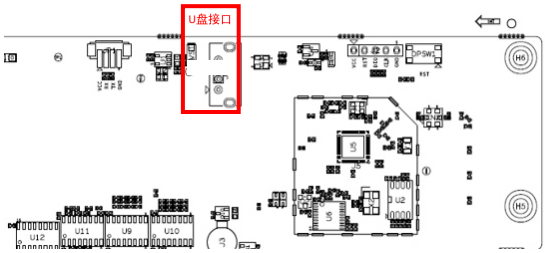

Figure 4-7 U Disk

Steps

1. Use the key to open the chassis and insert the U Disk into the USB port to enter level 4.
2. Press ADMIN CONTROL and Buzzer MUTE together to enter Level 3. Long press USB button for 13 seconds.
3. The LED 8 is on, indicating that the updating process has begun.
4. After the updating is completed, LED 8 is off, and the LED 9 is on for 5 seconds. The control panel returns to standby state.
5. Reboot the controller to finish the upgrade.

4.2.11 Export Log by U Disk

Steps

1. Use the key to open the chassis and insert the U Disk into the USB port to enter level 4.
2. Press ADMIN CONTROL and Buzzer MUTE together to enter Level 3. Long press USB button for 13 seconds.
3. The exporting log process has begun.
4. After the exporting is completed, the control panel returns to standby state.

4.2.12 Total Loss of the Power Supply

when the main power is loss, the battery will supply the power;
When using battery power supply, if the battery voltage is lower than the undervoltage value, a fault sound will be issued at least one hour.

4.2.13 Output to Fire Alarm Devices

In Level 2 , you can mute the sounder when the fire alarm triggers the bell output. After muting the sounder, you can press the SOUNDER MUTE button in Level 2 to make the sounder output again.
If the sounder is under muting, not be disabled, the sounder will be output again when a new fire alarm occurs.
If the sounder is disabled, it will not respond.

Chapter 5 Maintenance Management

5.1 Daily Maintenance Management

To keep your device in good working condition, please follow these requirements:

- Simulate alarm test: Test the device once half a year (recommended).
- Battery check: Conduct a visual inspection every quarter and perform a full discharge test once a year to ensure they are in good condition.
- Fuse maintenance: Check the fuse when the main and spare battery power supply is abnormal If the fuse is burnt out, replace the fuse with the same specification of 10 A 250 VAC.

Table 5-1 Indicator in Chassis Description

Green Indicator		Yellow Indicator	
LED 1	On: Main device is in use Flash: Main device communication fault Off: Main device is not in use	ZONE 1	On: Zone 1 has a short circuit Flash: Zone 1 has an open circuit Off: No fault
LED 2	On: Sub device 1 is in use Flash: Sub device 1 communication fault Off: Sub device 1 is not in use	ZONE 2	On: Zone 2 has a short circuit Flash: Zone 2 has an open circuit Off: No fault
LED 3	On: Sub device 2 is in use Flash: Sub device 2 communication fault Off: Sub device 2 is not in use	ZONE 3	On: Zone 3 has a short circuit Flash: Zone 3 has an open circuit Off: No fault
LED 4	On: Sub device 3 is in use Flash: Sub device 3 communication fault Off: Sub device 3 is not in use	ZONE 4	On: Zone 4 has a short circuit Flash: Zone 4 has an open circuit Off: No fault
LED 5	On: Sub device 4 is in use Flash: Sub device 4 communication fault Off: Sub device 4 is not in use	ZONE 5	On: Zone 5 has a short circuit Flash: Zone 5 has an open circuit Off: No fault
LED 6	On: Sub device 5 is in use Flash: Sub device 5 communication fault Off: Sub device 5 is not in use	ZONE 6	On: Zone 6 has a short circuit Flash: Zone 6 has an open circuit Off: No fault
LED 7	Flash: Power board communication fault Off: Power board communication normal	ZONE 7	On: Zone 7 has a short circuit Flash: Zone 7 has an open circuit Off: No fault
LED 8	On: Function is in progress Flash: Operation Off: No operation	ZONE 8	On: Zone 8 has a short circuit Flash: Zone 8 has an open circuit Off: No fault
LED 9	On: Operation is succeed. Flash: Operation is failed (turns off after 5s).	SOUNDER	On: Sounder has a short circuit Flash: Sounder has an open circuit Off: No fault

A. Simple Fault Handling Methods

Fault Type	Handling Methods
Power Fault	Main power fault: Check if the fire power supply is normal; Whether the main power switch is turned on; Check if the fuse is blown (replace if it is). Spare power failure: Check if the spare power switch is turned on; Is the battery voltage normal; Is the spare fuse blown out (replace if it is) Danger Please use the correct model of fuse for replacement, otherwise there is a risk of electric shock or fire.
No Sound from the Sound Device	If there is no corresponding sound when reporting a fault or fire alarm, you can check if the buzzer terminal wiring is broken or if the connection is good.
Mains Fault indicator is constantly on after starting up	Check whether the mains power supply and fuse are in good condition.
Battery Fault indicator is constantly on after starting up	Check the relevant backup electrical plug-ins to ensure that the backup electrical connection is normal and check whether the backup power supply is out of power or damaged.
Fault indicator of zone is constantly on	Check whether the connection between devices is good and check the bus connection.

B. Dimension Drawing

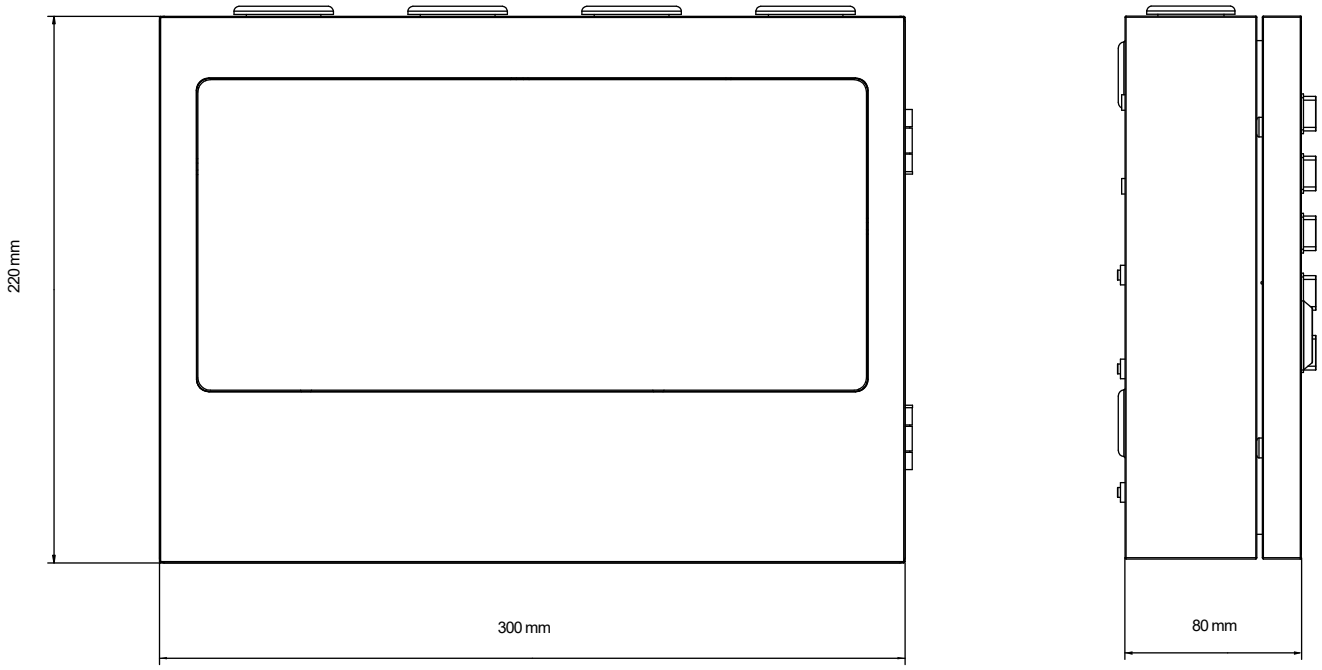

Figure E-1 HF-C102/HF-C104/HF-C108 Dimension

C. Specification

Item	Specification
Name	Conventional fire alarm control panel / Power supply equipment
Model	HF-C102 / HF-C104 / HF-C108
PSE Model	HF-C1-PSE
Standard	EN 54-2: 1997 + A1:2006, EN 54-4: 1997 + A1: 2002 + A2: 2006
Main Power	110 V ~ 240V / 50 Hz ~ 60 Hz / 55W
Battery Power	Equipped with two 2200 mA*h / 12 V sealed lead-acid batteries
Communication Distance	RVS 2*1.5 mm^2 flame retardant wire, max distance: 500m
Alarm Sound Pressure	75dB @1m
Local Silence	Yes
Reset	Yes
Self-Test	Yes
Ethernet Interface	1 way
Auxiliary Power Interface	4 way
USB Interface	1 way
24V Out	1 way, 22V-27.5V / 500mA
Fire Bell Output	2 way, 27.5V/500mA for all
Fire Alarm Relay Out	1 way
Fault Relay out	1 way
RS-485 interface	1 way, 5V, Baud Rate 19200
Spare Fuse	250 V 10A
Dimension	W 300 mm × H 220 mm × D 80 mm
Weight	4.9 kg (with 2 batteries and package)
Shell Material	Metal
Power	Main power: 110 V ~ 240V / 50 Hz ~ 60 Hz Backup power: 2200 mA*h / 12 V (2 pcs)
Working Environment	Temp. : -10 °C ~ 55 °C, Humidity: 5%～95% (non-condensing)
Rated capacity	HF-C102: 2 zones, up to 32 conventional devices in one zone

Item	Specification
	HF-C104: 4 zones, up to 32 conventional devices in one zone HF-C108: 8 zones, up to 32 conventional devices in one zone
PSE	Model: HF-C1-PSE Type: Rechargeable lead-acid battery Life: 3 years Rated voltage: 12V Rated capacity: 2.2Ah Final voltage: 10.5V Max charging voltage: 0.6A Ri $_{max}$(maximum internal resistance): 2Ω Max discharging current: 1.1A max Output: DC 27.5 V I max.a: 1.8A max I max.b: 1.8A max I min: 70mA max Battery Output: DC 24V, 1.0A max.

D. Packing List

Item	Amount Specification	Note
Conventional Fire Alarm Control Panel	1	
User Manual	1	
Spare Fuse	1	250 V 10A Fuse
Chassis Key	2	
Green Wiring Terminal	12 for HF-C102 14 for HF-C104 18 for HF-C108	Insert them on the interface board
3.3 kΩResistance	6 or 10	6 for HF-C102/HF-C104, 10 for HF-C108
6.8 kΩResistance	2	Connect to the wiring terminal and insert the interface board

See Far, Go Further