HIKVISION

DS-K1T674 Series
Face Recognition Terminal

Quick Start Guide
UD47014B-A

User Manual

Quick Guide

1 Installation and Wiring → 2 Appearance and Interface → 3 Quick Operation → 4 FAQ

1.1 Installation

- The minimum bearing weight of the wall or other places should be 3 times heavier than the device weight.
- Please prepare the following tools and accessories: screwdriver (self purchased), screws, cables, network cables (self purchased), adapters (self purchased), glass glue and glue gun (self purchased).
- For indoor use only.

1. Make sure the cables are threaded through the hole.

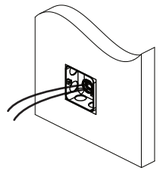

The height of the gangbox can refer to the standard for building wall switches, which is approximately 1.35 to 1.45 meters above the ground.

2. Secure the mounting plate on the gang box with two supplied screws (SC-KA4×25).

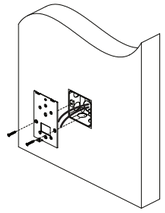

3. Use a screwdriver to loosen the screws on the back cover of the device and remove the back cover.

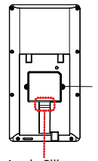

Apply Silicone Sealant

4. Complete the wiring. See the wiring diagram below (1.2) for details. And Fix the back cover.

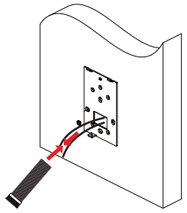

5. Hang the device into the plate from top to bottom. Secure the device on the mounting plate with 2 supplied screw (SC-KM3X8-T10-SUS-NL).

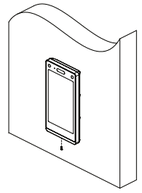

1.2 Wiring

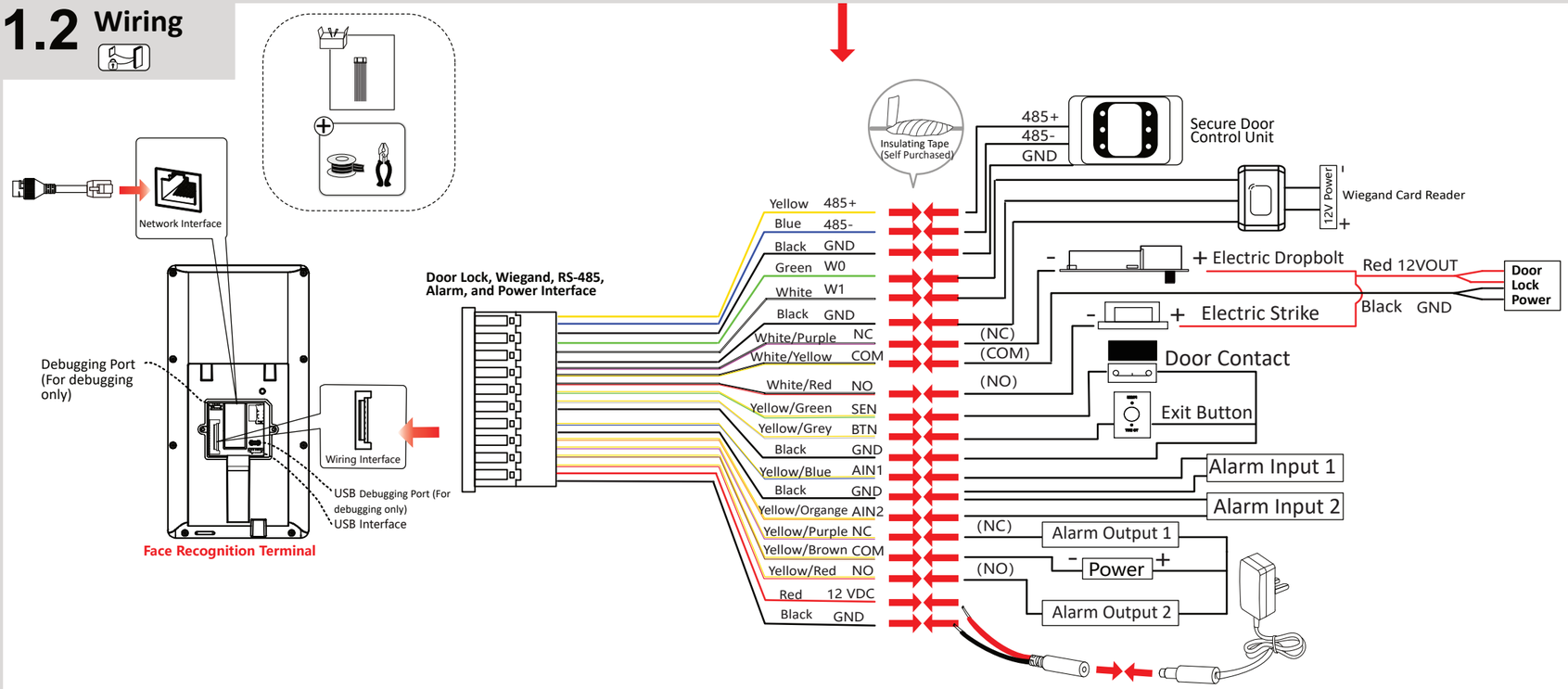

- Use a DC 12 V power supply. Do not connect the device directly to the 220 V mains.
- The suggested external power supply for door lock is 12 V, 1 A.
- No power adapter is included in the box by default.

Data Protection

● To protect data, the development of Hikvision Products incorporates privacy by design principles. For example, for Products with facial recognition features, biometrics data is stored in your Products with encryption method; for fingerprint Products, only fingerprint template will be saved, which is impossible to reconstruct a fingerprint image.

● As a data controller/processor, you may process personal data, including collection, storage, use, processing, disclosure, deletion, etc. You are advised to pay attention to and comply with applicable laws and regulations related to the protection of personal data, including without limitation, conducting security controls to safeguard personal data, such as, implementing reasonable administrative and physical security controls, conduct periodic reviews and the assessments of the effectiveness of your security controls.

© Hangzhou Hikvision Digital Technology Co., Ltd. All rights reserved.

1.3 Wiring with Secure Door Control Unit

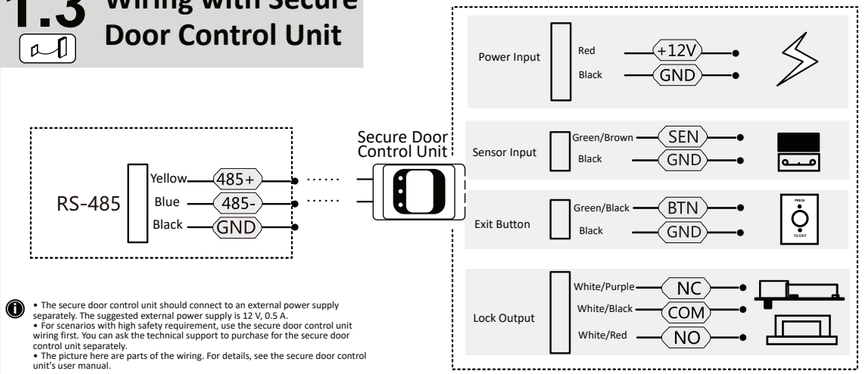

• The secure door control unit should connect to an external power supply separately. The suggested external power supply is 12 V, 0.5 A.
• For scenarios with high safety requirement, use the secure door control unit wiring first. You can ask the technical support to purchase for the secure door control unit separately.
• The picture here are parts of the wiring. For details, see the secure door control unit's user manual.

2 Appearance and Interface

Interface and Dimension

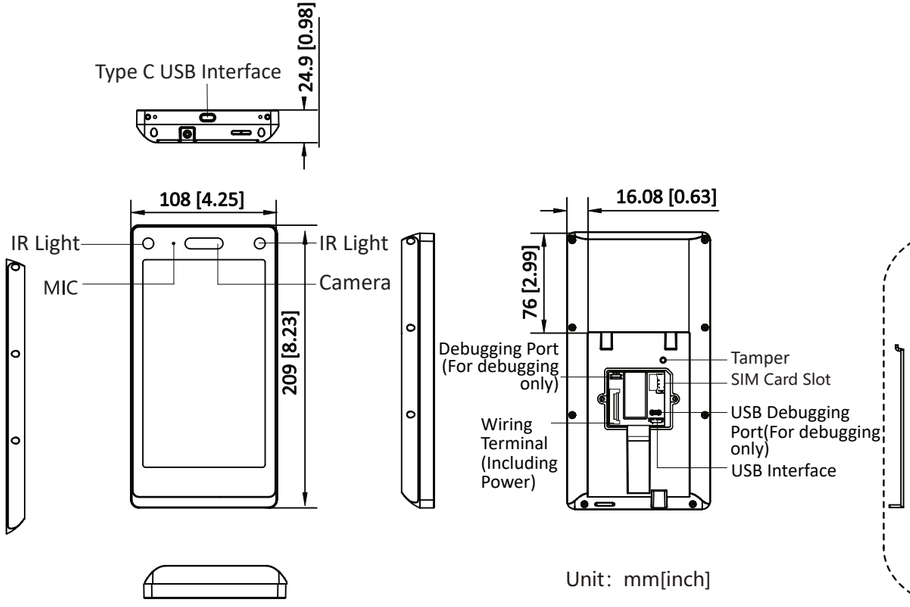

Unit: mm[inch]

Mounting Plate

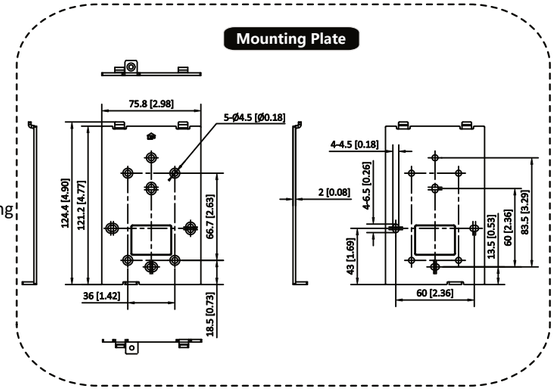

3 Quick Operation

● Activate via Device

You can create an activation password and activate the device.
1. After the device is powered on, the device will enter activation page.
2. Create a password by pressing the button.
3. Select Confirm Password edit box and repeat the password.
For mobile Web activation, please refer to the user manual.

• The password cannot contain username, 123, admin, 4 or more consecutive digits in increments or decrement, or the same characters.
• The password cannot contain the phrases hik, hkws, or hikvision, and is not case sensitive.
• Press ⊴ to delete the input.

In order to improve the security of the product network, the password must be 8 to16 digits long, and at least two or more combinations of numbers, lowercase letters, uppercase letters, and special characters.

● Go to Menu Page

1. On the authentication page, press and hold the OK button to enter the administrator authentication page.
2. Use the administrator credentials or enter the password for verification.
3. Press the OK button to enter the menu page.

● Configure Authentication Mode

1. On the menu page, select **Person Management**, and select the person.
2. Select the **Authentication Mode** as **Device Mode**.
3. Go to **Access Control Settings** → **Authentication Settings**, you can set the **Authentication Type** as **Single Authentication** or **Multiple Authentication**, and set the authentication mode.

● Open Door

According to the configured authentication method, the door will open via the corresponding credentials (card, password, QR code, etc.), and the door will open after the authentication is succeed.

Different models support different types of credentials, please refer to the actual device.

4 FAQ

Forget Password

If you forget your password, you can reset it on your device.

1. Select **Forgot Password** on the login page to enter the password reset configuration page.
2. Enter the E-mail and code. Click **Next**.
3. Set a new password and confirm the new password.

About this Document

● This Document includes instructions for using and managing the Product. Pictures, charts, images and all other information hereinafter are for description and explanation only.
● The information contained in the Document is subject to change, without notice, due to firmware updates or other reasons. Please find the latest version of the Document at the Hikvision website (***https://www.hikvision.com***). Unless otherwise agreed, Hangzhou Hikvision Digital Technology Co., Ltd. or its affiliates (hereinafter referred to as "Hikvision") makes no warranties, express or implied.
● Please use the Document with the guidance and assistance of professionals trained in supporting the Product.

About this Product

This product can only enjoy the after-sales service support in the country or region where the purchase is made.

Acknowledgment of Intellectual Property Rights

● Hikvision owns the copyrights and/or patents related to the technology embodied in the Products described in this Document, which may include licenses obtained from third parties.
● Any part of the Document, including text, pictures, graphics, etc., belongs to Hikvision. No part of this Document may be excerpted, copied, translated, or modified in whole or in part by any means without written permission.
● ***HIKVISION*** and other Hikvision's trademarks and logos are the properties of Hikvision in various jurisdictions.
● Other trademarks and logos mentioned are the properties of their respective owners.

LEGAL DISCLAIMER

● TO THE MAXIMUM EXTENT PERMITTED BY APPLICABLE LAW, THIS DOCUMENT AND THE PRODUCT DESCRIBED, WITH ITS HARDWARE, SOFTWARE AND FIRMWARE, ARE PROVIDED "AS IS" AND "WITH ALL FAULTS AND ERRORS". HIKVISION MAKES NO WARRANTIES, EXPRESS OR IMPLIED, INCLUDING WITHOUT LIMITATION, MERCHANTABILITY, SATISFACTORY QUALITY, OR FITNESS FOR A PARTICULAR PURPOSE. THE USE OF THE PRODUCT BY YOU IS AT YOUR OWN RISK. IN NO EVENT WILL HIKVISION BE LIABLE TO YOU FOR ANY SPECIAL, CONSEQUENTIAL, INCIDENTAL, OR INDIRECT DAMAGES, INCLUDING, AMONG OTHERS, DAMAGES FOR LOSS OF BUSINESS PROFITS, BUSINESS INTERRUPTION, OR LOSS OF DATA, CORRUPTION OF SYSTEMS, OR LOSS OF DOCUMENTATION, WHETHER BASED ON BREACH OF CONTRACT, TORT (INCLUDING NEGLIGENCE), PRODUCT LIABILITY, OR OTHERWISE, IN CONNECTION WITH THE USE OF THE PRODUCT, EVEN IF HIKVISION HAS BEEN ADVISED OF THE POSSIBILITY OF SUCH DAMAGES OR LOSS.
● YOU ACKNOWLEDGE THAT THE NATURE OF THE INTERNET PROVIDES FOR INHERENT SECURITY RISKS, AND HIKVISION SHALL NOT TAKE ANY RESPONSIBILITIES FOR ABNORMAL OPERATION, PRIVACY LEAKAGE OR OTHER DAMAGES RESULTING FROM CYBER-ATTACK, HACKER ATTACK, VIRUS INFECTION, OR OTHER INTERNET SECURITY RISKS; HOWEVER, HIKVISION WILL PROVIDE TIMELY TECHNICAL SUPPORT IF REQUIRED.
● YOU AGREE TO USE THIS PRODUCT IN COMPLIANCE WITH ALL APPLICABLE LAWS, AND YOU ARE SOLELY RESPONSIBLE FOR ENSURING THAT YOUR USE CONFORMS TO THE APPLICABLE LAW. ESPECIALLY, YOU ARE RESPONSIBLE, FOR USING THIS PRODUCT IN A MANNER THAT DOES NOT INFRINGE ON THE RIGHTS OF THIRD PARTIES, INCLUDING WITHOUT LIMITATION, RIGHTS OF PUBLICITY, INTELLECTUAL PROPERTY RIGHTS, OR DATA PROTECTION AND OTHER PRIVACY RIGHTS. YOU SHALL NOT USE THIS PRODUCT FOR ANY PROHIBITED END-USES, INCLUDING THE DEVELOPMENT OR PRODUCTION OF WEAPONS OF MASS DESTRUCTION, THE DEVELOPMENT OR PRODUCTION OF CHEMICAL OR BIOLOGICAL WEAPONS, ANY ACTIVITIES IN THE CONTEXT RELATED TO ANY NUCLEAR EXPLOSIVE OR UNSAFE NUCLEAR FUEL-CYCLE, OR IN SUPPORT OF HUMAN RIGHTS ABUSES.
● IN THE EVENT OF ANY CONFLICTS BETWEEN THIS DOCUMENT AND THE APPLICABLE LAW, THE LATTER PREVAILS.

Safety Instruction

Warning

- In the use of the product, you must be in strict compliance with the electrical safety regulations of the nation and region.
- Do not connect several devices to one power adapter as adapter overload may cause over-heat or fire hazard.
- If smoke, odors or noise rise from the device, turn off the power at once and unplug the power cable, and then please contact the service center.
- The socket-outlet shall be installed near the equipment and shall be easily accessible.
- 1. Do not ingest battery. Chemical burn hazard!
  2. This product contains a coin/button cell battery. If the coin/button cell battery is swallowed, it can cause severe internal burns in just 2 hours and can lead to death.
  3. Keep new and used batteries away from children.
  4. If the battery compartment does not close securely, stop using the product and keep it away from children.
  5. If you think batteries might have been swallowed or placed inside any part of the body, seek immediate medical attention.
  6. CAUTION: Risk of explosion if the battery is replaced by an incorrect type.
  7. Improper replacement of the battery with an incorrect type may defeat a safeguard (for example, in the case of some lithium battery types).
  8. Do not dispose of the battery into fire or a hot oven, or mechanically crush or cut the battery, which may result in an explosion.
  9. Do not leave the battery in an extremely high temperature surrounding environment, which may result in an explosion or the leakage of flammable liquid or gas.
  10. Do not subject the battery to extremely low air pressure, which may result in an explosion or the leakage of flammable liquid or gas.
  11. Dispose of used batteries according to the instructions

Caution

- Do not drop the device or subject it to physical shock, and do not expose it to high electromagnetism radiation. Avoid the equipment installation on vibrations surface or places subject to shock (ignorance can cause equipment damage).
- Do not place the device in extremely hot (refer to the specification of the device for the detailed operating temperature), cold, dusty or damp locations, and do not expose it to high electromagnetic radiation.
- Exposing the equipment to direct sun light, low ventilation or heat source such as heater or radiator is forbidden (ignorance can cause fire danger). The device cover for indoor use shall be kept from rain and moisture.
- Exposing the equipment to direct sun light, low ventilation or heat source such as heater or radiator is forbidden (ignorance can cause fire danger).
- Please use a soft and dry cloth when clean inside and outside surfaces of the device cover, do not use alkaline detergents.
- Biometric recognition products are not 100% applicable to anti-spoofing environments. If you require a higher security level, use multiple authentication modes.
- The serial port of the equipment is used for debugging only.
- Wall Mounting: Install the equipment according to the instructions in this manual. To prevent injury, this equipment must be securely attached to the floor/wall in accordance with the installation instructions.
- Improper use or replacement of the battery may result in hazard of explosion. Replace with the same or equivalent type only. Dispose of used batteries according to the instructions provided by the battery manufacturer.