Guidance Terminal

Quick Start Guide

About this Document

- This Document includes instructions for using and managing the Product. Pictures, charts, images and all other information hereinafter are for description and explanation only.
- The information contained in the Document is subject to change, without notice, due to firmware updates or other reasons. Please find the latest version of the Document at the Hikvision website (***https://www.hikvision.com***). Unless otherwise agreed, Hangzhou Hikvision Digital Technology Co., Ltd. or its affiliates (hereinafter referred to as "Hikvision") makes no warranties, express or implied.
- Please use the Document with the guidance and assistance of professionals trained in supporting the Product.

About this Product

This product can only enjoy the after-sales service support in the country or region where the purchase is made.

Acknowledgment of Intellectual Property Rights

- Hikvision owns the copyrights and/or patents related to the technology embodied in the Products described in this Document, which may include licenses obtained from third parties.
- Any part of the Document, including text, pictures, graphics, etc., belongs to Hikvision. No part of this Document may be excerpted, copied, translated, or modified in whole or in part by any means without written permission.
- **HIKVISION** and other Hikvision's trademarks and logos are the properties of Hikvision in various jurisdictions.
- Other trademarks and logos mentioned are the properties of their respective owners.

LEGAL DISCLAIMER

- TO THE MAXIMUM EXTENT PERMITTED BY APPLICABLE LAW, THIS DOCUMENT AND THE PRODUCT DESCRIBED, WITH ITS HARDWARE, SOFTWARE AND FIRMWARE, ARE PROVIDED "AS IS" AND "WITH ALL FAULTS AND ERRORS". HIKVISION MAKES NO WARRANTIES, EXPRESS OR IMPLIED, INCLUDING WITHOUT LIMITATION, MERCHANTABILITY, SATISFACTORY QUALITY, OR FITNESS FOR A PARTICULAR PURPOSE. THE USE OF THE PRODUCT BY YOU IS AT YOUR OWN RISK. IN NO EVENT WILL HIKVISION BE LIABLE TO YOU FOR ANY SPECIAL, CONSEQUENTIAL, INCIDENTAL, OR INDIRECT DAMAGES, INCLUDING, AMONG OTHERS, DAMAGES FOR LOSS OF BUSINESS PROFITS, BUSINESS INTERRUPTION, OR LOSS OF DATA, CORRUPTION OF SYSTEMS, OR LOSS OF DOCUMENTATION, WHETHER BASED ON BREACH OF CONTRACT, TORT (INCLUDING NEGLIGENCE), PRODUCT LIABILITY, OR OTHERWISE, IN CONNECTION WITH THE USE OF THE PRODUCT, EVEN IF HIKVISION HAS BEEN ADVISED OF THE POSSIBILITY OF SUCH DAMAGES OR LOSS.

- YOU ACKNOWLEDGE THAT THE NATURE OF THE INTERNET PROVIDES FOR INHERENT SECURITY RISKS, AND HIKVISION SHALL NOT TAKE ANY RESPONSIBILITIES FOR ABNORMAL OPERATION, PRIVACY LEAKAGE OR OTHER DAMAGES RESULTING FROM CYBER-ATTACK, HACKER ATTACK, VIRUS INFECTION, OR OTHER INTERNET SECURITY RISKS; HOWEVER, HIKVISION WILL PROVIDE TIMELY TECHNICAL SUPPORT IF REQUIRED.
- YOU AGREE TO USE THIS PRODUCT IN COMPLIANCE WITH ALL APPLICABLE LAWS, AND YOU ARE SOLELY RESPONSIBLE FOR ENSURING THAT YOUR USE CONFORMS TO THE APPLICABLE LAW. ESPECIALLY, YOU ARE RESPONSIBLE, FOR USING THIS PRODUCT IN A MANNER THAT DOES NOT INFRINGE ON THE RIGHTS OF THIRD PARTIES, INCLUDING WITHOUT LIMITATION, RIGHTS OF PUBLICITY, INTELLECTUAL PROPERTY RIGHTS, OR DATA PROTECTION AND OTHER PRIVACY RIGHTS. YOU SHALL NOT USE THIS PRODUCT FOR ANY PROHIBITED END-USES, INCLUDING THE DEVELOPMENT OR PRODUCTION OF WEAPONS OF MASS DESTRUCTION, THE DEVELOPMENT OR PRODUCTION OF CHEMICAL OR BIOLOGICAL WEAPONS, ANY ACTIVITIES IN THE CONTEXT RELATED TO ANY NUCLEAR EXPLOSIVE OR UNSAFE NUCLEAR FUEL-CYCLE, OR IN SUPPORT OF HUMAN RIGHTS ABUSES.
- IN THE EVENT OF ANY CONFLICTS BETWEEN THIS DOCUMENT AND THE APPLICABLE LAW, THE LATTER PREVAILS.

© Hangzhou Hikvision Digital Technology Co., Ltd. All rights reserved.

Symbol Conventions

The symbols that may be found in this document are defined as follows.

Symbol	Description
Note	Provides additional information to emphasize or supplement important points of the main text.
Caution	Indicates a potentially hazardous situation, which if not avoided, could result in equipment damage, data loss, performance degradation, or unexpected results.
Danger	Indicates a hazard with a high level of risk, which if not avoided, will result in death or serious injury.

Chapter 1 Introduction

1.1 Introduction

Guidance terminal (hereinafter referred to as device), based on the ARM processor, is a remarkable intelligent management system used for underground garage. Adopting the advanced parking guidance and find my car system, the device is capable of connecting multiple parking cameras to realize parking space detection, license plate recognition, guidance screen information control, video storage, playback, etc.

The device is widely used in the parking lot of the community, business center, and hotels. It greatly shortens the parking time and vehicle searching time of customers, improving the utilization of the spare parking spaces.

1.2 Features

- Supports access to dual-lens parking cameras or single-lens parking cameras.
- Supports Hikvision PoE power supply for parking cameras.
- Supports TPM cascade and data upload.
- Supports LED display control, able to show remaining parking spaces both online and offline.
- Supports IP address automatic allocation.
- HDD slots with large capacity distributed storage, storing recordings up to 30 days.

1.3 Application Scenarios

Parking cameras can be connected to the device via network to realize the integrated management, video search, record, playback, etc. Refer to the following figure for the application scenarios.

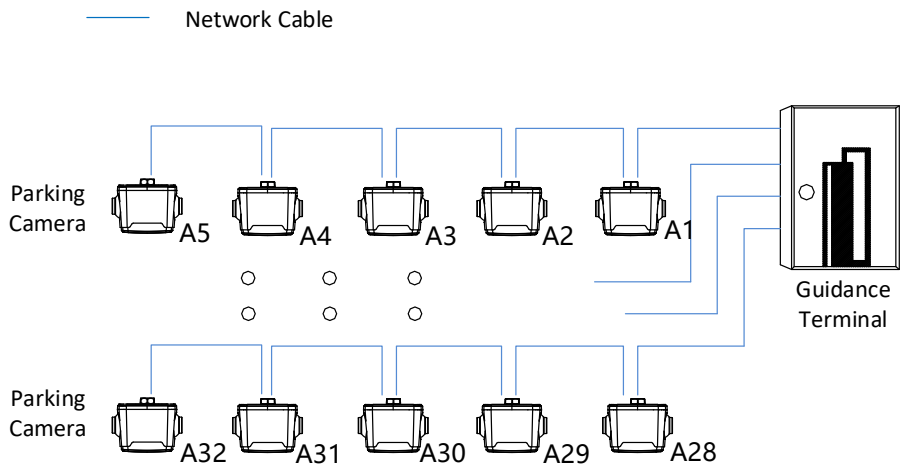

Figure 1-1 Application Scenario for PoE Mode

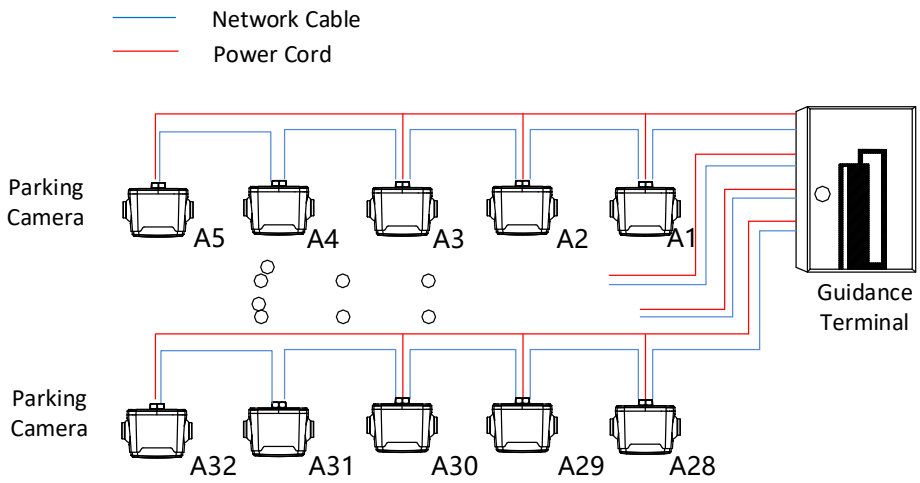

Figure 1-2 Application Scenario for Non-PoE Mode

NOTE

- Refer to User Manual of Parking Camera for the installation.
- The PoE supported by the device is Hikvision PoE. The non-standard PoE cannot access to standard PoE switches.
- In Hikvision PoE power supply mode:
  - The max. distance between the nearest camera and the terminal shall not exceed 70 m, and the max. distance between the farthest camera and the terminal shall not exceed 100 m.
  - When a Hikvision PoE parking camera is connected to the device, it can be powered by the network cable directly.
  - White light configuration is not supported.

In Hikvision PoE power supply mode, the number of accessible camera channels and max. number of hand-in-hand cameras per channel are shown in the table below.

Table 1-1 Number of Accessible Parking Cameras

PoE Port (using all dual-color lights as an example)				
External Supplement Lights	0	1	2	3
Channels / Camera Type	Max. Hand-in-Hand Cameras Per Channel	Max. Hand-in-Hand Cameras Per Channel	Max. Hand-in-Hand Cameras Per Channel	Max. Hand-in-Hand Cameras Per Channel
Single-lens	4	4	3	3
Dual-lens	4	4	3	2

Chapter 2 Installation

2.1 Interface Description

The device interface is shown in the figure below, where parking cameras and other devices can be connected to the device via corresponding interfaces.

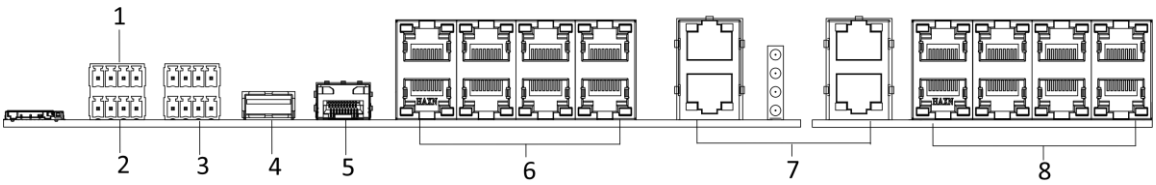

Figure 2-1 Interface Overview

Table 2-1 Interface Description

No.	Name	Description
1	ALARM OUT	Reserved.
2	RS-485	Reserved.
3	RS-232	Reserved.
4	USB 3.0	1 USB 3.0 port for connecting to mouse, keyboard, USB flash drive, etc.
5	SFP	1 optical port. SFP optical module is needed for network communication.
6	10/100/1000 M	8 1000 M WAN network ports for platform and guidance screen access.
7	10/100/1000 M	4 1000 M LAN network ports for connecting non-professional PoE devices to the mainboard and PoE board.
8	10/100 M: Power & Data	8 100 M LAN network ports for connecting to Hikvision PoE parking cameras, which support Hikvision PoE power supply.

2.2 Install Device

Check the installation environment before installation.

- Install the device in the location where it is large enough to install the expansion screws.
- Make sure the installation position is strong enough to withstand at least 4 times the

weight of the device and its accessories.

- Make sure that there is enough space at the installation position to accommodate the device and its accessories.

The specific installation steps are as follows.

Step 1 Rotate the key in the keyhole to open the cover. The components of the device are shown in Figure 2-2.

- Air switch: Controls the circuit connected or disconnected, and overcurrent protection.
- Mesh power supply: The device has 2 parts of mesh power supply. The upper part is used to provide power for the mainboard with 12 VDC. The lower part is used to provide power for cameras and PoE board with 48 VDC.

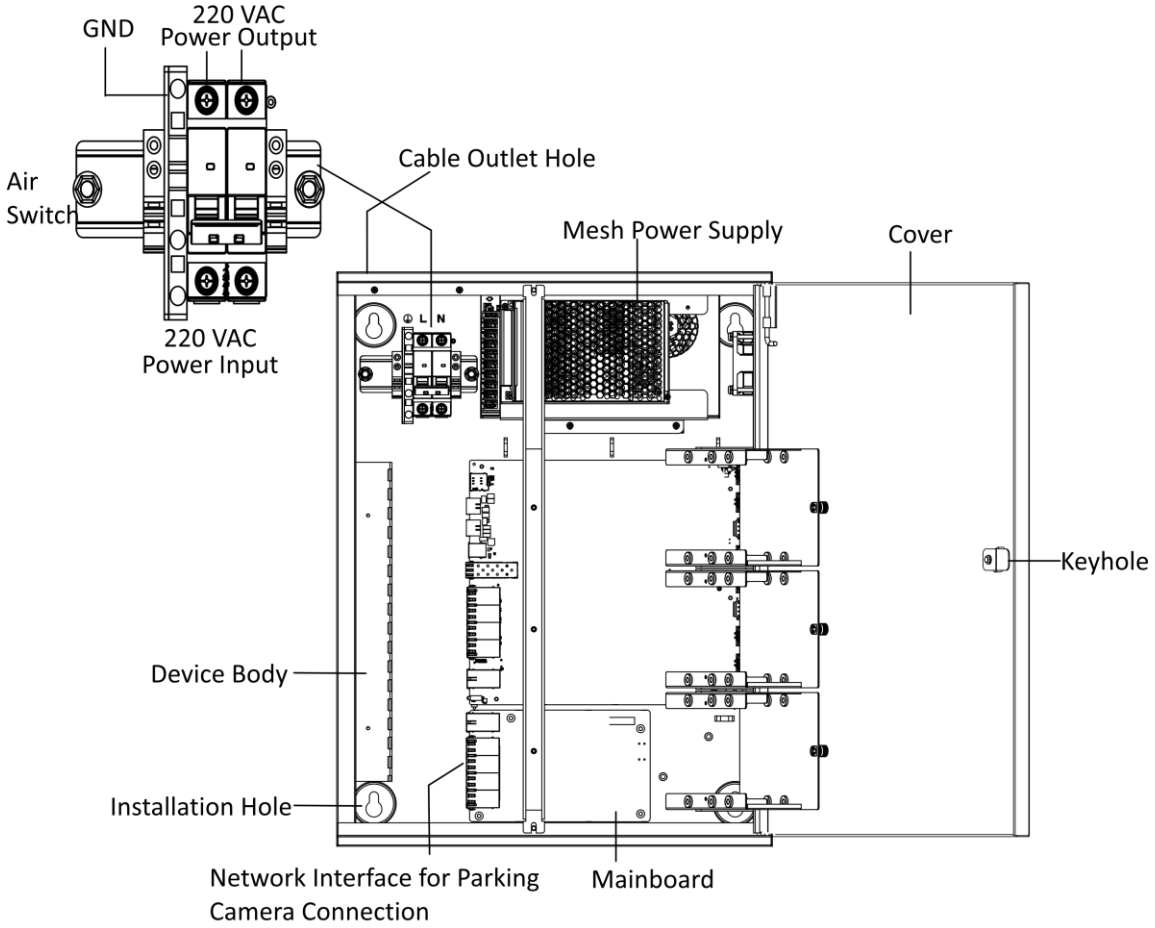

Figure 2-2 Open Cover

Step 2 Install the HDD.

1) Loosen the fixing screws of the HDD and the device, and lift the HDD slot to the appropriate position.
2) Insert the HDD to the HDD slot, and fix it with four SC-CUNC6-32 × 5 screws.
3) Repeat step 1) and step 2) to install more HDDs. Each HDD should be fixed with four screws.

4) Lay down the HDD slot, and fix the HDD slot to the device with M3 screws and nuts.

Step 3 Drill holes, and insert expansion bolts.

1) Drill four Ø8 screw holes on the wall as shown in Figure 2-3.
2) Insert the expansion bolts into the holes, and rotate the nuts clockwise to fasten the expansion bolts to the wall.
3) Unscrew the nuts of the expansion bolts.

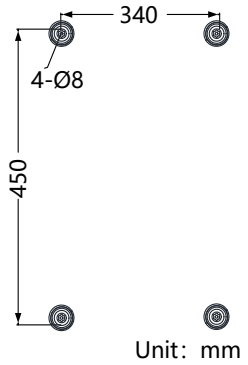

Figure 2-3 Insert Expansion Bolts

Step 4 Align the four installation holes on the device body to the four expansion bolts on the wall to hook the device on the screws, and then screw in the nuts to fix the device.

Step 5 Connect the network cable and power cord.

1) Remove the three M3 screws on the cable cover, and then remove the cable cover.

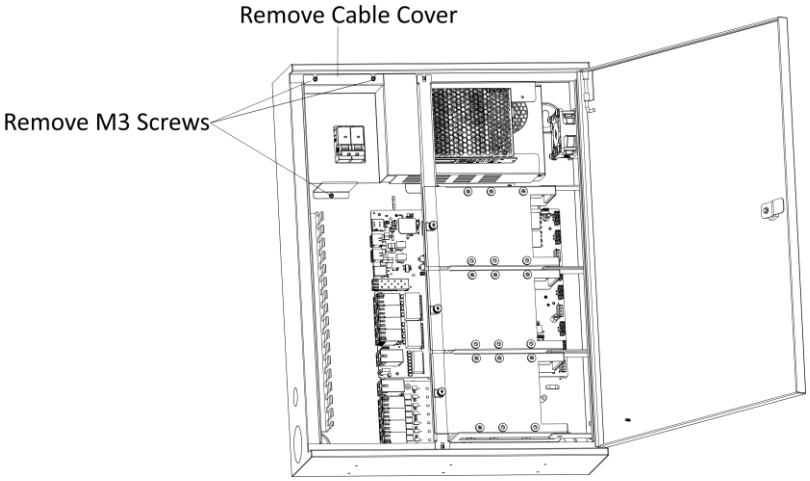

Figure 2-4 Remove Cable Cover

2) Route the network cable and power cord from the top or side outlet holes, and connect the cables according to the L, N, and PE markings.

Caution

Route the 220 VAC power cord from strong current outlet hole and other cables from weak current outlet hole to avoid interference.

- The weak current outlet hole is used for routing camera power cord, network cable, etc.
- The strong current outlet hole is used for routing the 220 VAC power cord.

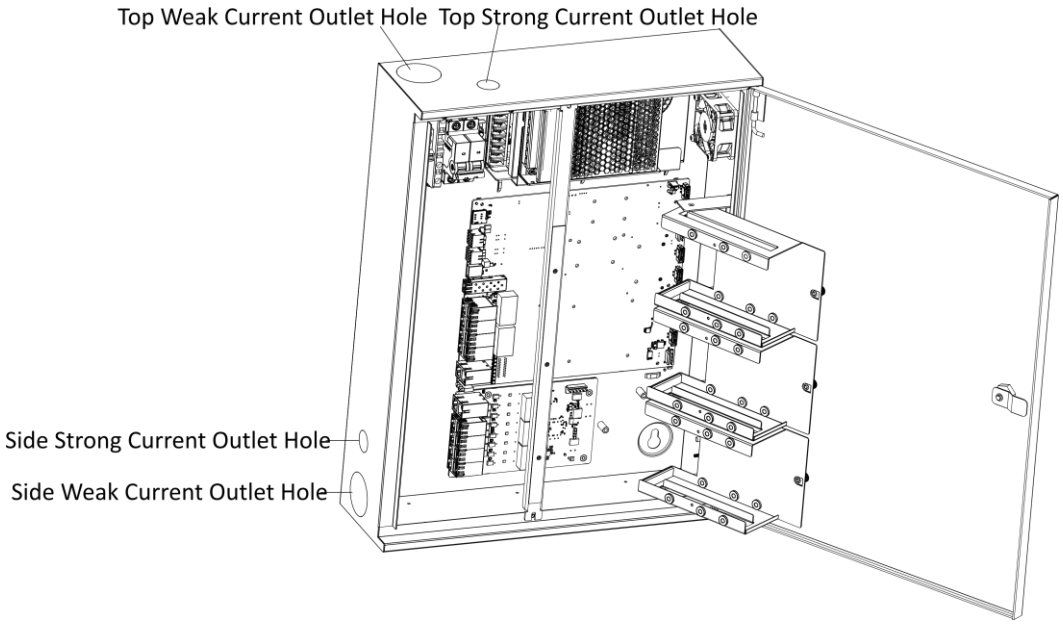

Figure 2-5 Connect Cables

3) Screw in the three M3 screws, and install the cable cover.

Step 6 Close the cover, and lock it with the key.

Chapter 3 Detailed Configuration

Scan the QR code below to get the user manual of the Guidance Terminal.

Figure 3-1 User Manual QR Code

See Far, Go Further

UD41874B-A