Explosion-Proof Junction Box

Quick Start Guide

Legal Information

About this Document

- This Document includes instructions for using and managing the Product. Pictures, charts, images and all other information hereinafter are for description and explanation only.
- The information contained in the Document is subject to change, without notice, due to firmware updates or other reasons. Please find the latest version of the Document at the Hikvision website (***https://www.hikvision.com***). Unless otherwise agreed, Hangzhou Hikvision Digital Technology Co., Ltd. or its affiliates (hereinafter referred to as "Hikvision") makes no warranties, express or implied.
- Please use the Document with the guidance and assistance of professionals trained in supporting the Product.

About this Product

This product can only enjoy the after-sales service support in the country or region where the purchase is made.

Acknowledgment of Intellectual Property Rights

- Hikvision owns the copyrights and/or patents related to the technology embodied in the Products described in this Document, which may include licenses obtained from third parties.
- Any part of the Document, including text, pictures, graphics, etc., belongs to Hikvision. No part of this Document may be excerpted, copied, translated, or modified in whole or in part by any means without written permission.

- HIKVISION and other Hikvision's trademarks and logos are the properties of Hikvision in various jurisdictions.
- Other trademarks and logos mentioned are the properties of their respective owners.

LEGAL DISCLAIMER

- TO THE MAXIMUM EXTENT PERMITTED BY APPLICABLE LAW, THIS DOCUMENT AND THE PRODUCT DESCRIBED, WITH ITS HARDWARE, SOFTWARE AND FIRMWARE, ARE PROVIDED "AS IS" AND "WITH ALL FAULTS AND ERRORS". HIKVISION MAKES NO WARRANTIES, EXPRESS OR IMPLIED, INCLUDING WITHOUT LIMITATION, MERCHANTABILITY, SATISFACTORY QUALITY, OR FITNESS FOR A PARTICULAR PURPOSE. THE USE OF THE PRODUCT BY YOU IS AT YOUR OWN RISK. IN NO EVENT WILL HIKVISION BE LIABLE TO YOU FOR ANY SPECIAL, CONSEQUENTIAL, INCIDENTAL, OR INDIRECT DAMAGES, INCLUDING, AMONG OTHERS, DAMAGES FOR LOSS OF BUSINESS PROFITS, BUSINESS INTERRUPTION, OR LOSS OF DATA, CORRUPTION OF SYSTEMS, OR LOSS OF DOCUMENTATION, WHETHER BASED ON BREACH OF CONTRACT, TORT (INCLUDING NEGLIGENCE), PRODUCT LIABILITY, OR OTHERWISE, IN CONNECTION WITH THE USE OF THE PRODUCT, EVEN IF HIKVISION HAS BEEN ADVISED OF THE POSSIBILITY OF SUCH DAMAGES OR LOSS.
- YOU ACKNOWLEDGE THAT THE NATURE OF THE INTERNET PROVIDES FOR INHERENT SECURITY RISKS, AND HIKVISION SHALL NOT TAKE ANY RESPONSIBILITIES FOR ABNORMAL OPERATION, PRIVACY LEAKAGE OR OTHER DAMAGES RESULTING FROM CYBER-ATTACK, HACKER ATTACK, VIRUS INFECTION, OR

OTHER INTERNET SECURITY RISKS; HOWEVER, HIKVISION WILL PROVIDE TIMELY TECHNICAL SUPPORT IF REQUIRED.

- YOU AGREE TO USE THIS PRODUCT IN COMPLIANCE WITH ALL APPLICABLE LAWS, AND YOU ARE SOLELY RESPONSIBLE FOR ENSURING THAT YOUR USE CONFORMS TO THE APPLICABLE LAW. ESPECIALLY, YOU ARE RESPONSIBLE, FOR USING THIS PRODUCT IN A MANNER THAT DOES NOT INFRINGE ON THE RIGHTS OF THIRD PARTIES, INCLUDING WITHOUT LIMITATION, RIGHTS OF PUBLICITY, INTELLECTUAL PROPERTY RIGHTS, OR DATA PROTECTION AND OTHER PRIVACY RIGHTS. YOU SHALL NOT USE THIS PRODUCT FOR ANY PROHIBITED END-USES, INCLUDING THE DEVELOPMENT OR PRODUCTION OF WEAPONS OF MASS DESTRUCTION, THE DEVELOPMENT OR PRODUCTION OF CHEMICAL OR BIOLOGICAL WEAPONS, ANY ACTIVITIES IN THE CONTEXT RELATED TO ANY NUCLEAR EXPLOSIVE OR UNSAFE NUCLEAR FUEL-CYCLE, OR IN SUPPORT OF HUMAN RIGHTS ABUSES.
- IN THE EVENT OF ANY CONFLICTS BETWEEN THIS DOCUMENT AND THE APPLICABLE LAW, THE LATTER PREVAILS.

© Hangzhou Hikvision Digital Technology Co., Ltd. All rights reserved.

Regulatory Information

Intended Use of the Camera

ATEX: Ex db ⅡC T6 Gb/Ex tb ⅢC T80°C Db

IECEx: Ex db ⅡC T6 Gb/Ex tb ⅢC T80°C Db

Hazardous Area Classification: Zone 1, Zone 2, Zone 21, Zone 22.

IP Degree: IP66/IP68 (2m, 2h)

Ex Standards:

IEC 60079-0: 2017	EN IEC 60079-0:2018
IEC 60079-1: 2014	EN 60079-1: 2014
IEC 60079-31: 2022	EN 60079-31: 2014

Special Conditions for Safe Use:

- The flameproof joint cannot be repaired.
- Use fasteners with yield stress ≥450MPa.
- The fasteners can only be replaced with identical ones.
- The equipment must not be used in areas affected by charge-producing processes, mechanical friction and separation processed electron mission (e.g in the vicinity of electrostatic coating equipment), and pneumatically conveyed dust to avoid electrostatic.
- The unused entries shall be equipped with Ex certified blanking elements with a compatible mode of protection for the intended use.

Nameplate:

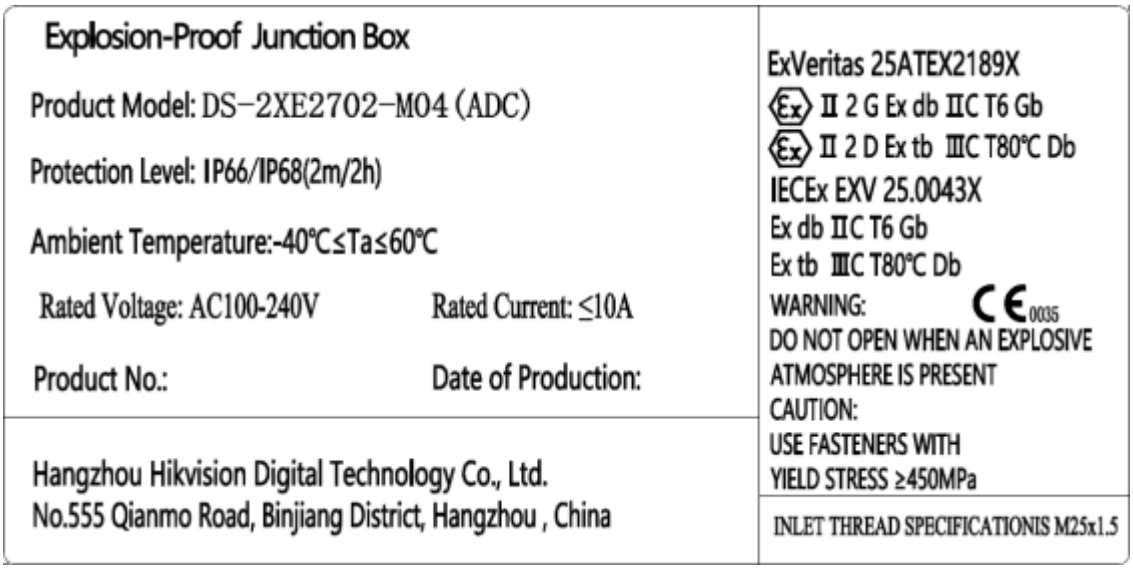

Explanation of Model Naming:

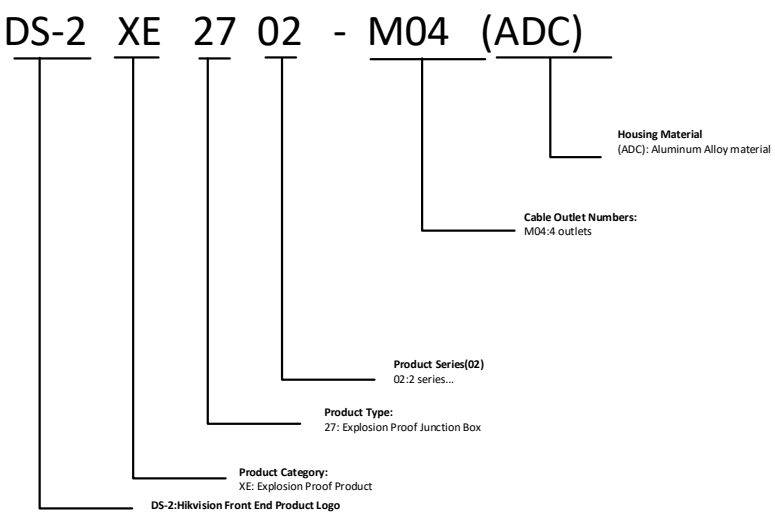

Mechanical Specification:

- Material: Aluminum Alloy(ADC)

Working Environment:

- Altitude (Above sea level): Within 2000 m

- Atmospheric pressure: 86 to 110 KPa
- Humidity: 10%~90%
- Temperature: -40 °C to 60 °C

Note:

To ensure safety of the users and explosion-proof performance of the device, your installation environment must meet the installation requirements of the device you purchased.

Tightening Torque Specification:

- Cable compression nut: 36 N·m
- Explosion-proof screw (M6): 10 N·m

Grounding Instruction:

- The internal grounding should be connected to an M4 × 10 carbon steel screw inside the device housing. The equipotential bonding component shall be effectively connected using a conductor with a cross-sectional area of no less than 4 mm^2.
- Internal Grounding Screw: M4 × 10, carbon steel.
- External Grounding Screw: M6 × 12 (with flat washer and spring washer), SUS316L.

Safety Information

Please read all the safety information carefully before using.

- In the use of the product, you must be in strict compliance with the electrical safety regulations of the nation and region.
- If the ingress protection level is lower than IPx4, the device shall not be exposed to water dripping or splashing, and no objects filled with liquids, such as vases, shall be placed on the device.

Refer to datasheet for details.

- The device must be connected to an earthed mains socket-outlet.
- For the device powered on and off only by power plug and socket-outlet, the socket-outlet shall be installed near the device and easily accessible.
- Do not touch the bare components (such as the metal contacts of the inlets) and wait for at least 5 minutes, since electricity may still exist after the device is powered off.
- For the permanently connected device without a disconnect equipment, a readily accessible disconnect equipment shall be incorporated into the electrical installation of the connected building. Refer to datasheet for details.
- For the permanently connected device without an overcurrent protection equipment, an overcurrent protection equipment shall be incorporated into the electrical installation of the connected building. The specifications of the overcurrent protection equipment shall not exceed that of the building. Refer to datasheet for details.
- For the permanently connected device without an all-pole mains switch, an all-pole mains switch shall be incorporated into the electrical installation of the connected building. Refer to datasheet for details.
- If the device is powered by terminals connected to the power cord, ensure correct voltage and wiring of the terminals for connection to mains supply.
- For the device with the sign ϟ indicating hazardous live, the external wiring connected to the terminals requires installation

by an instructed person.

- + identifies the positive terminals of the device which is used with, or generates direct current, and - identifies the negative terminals of the device which is used with, or generates direct current.
- No naked flame sources, such as lighted candles, should be placed on the device.
- If the serial port of the device is used for debugging only, it is reserved only for professionals or technical support for device maintenance. Refer to datasheet for details.
- If the device installation is needed,

  1. Install the device according to the instructions in Quick Start Guide.

  2. To prevent injury, this device must be securely attached to the installation surface in accordance with the installation instructions.

  Refer to quick start guide for details.
- Never place the device in an unstable location. The device may fall, causing serious personal injury or death.
- The additional force shall be equal to three times the weight of the device but not less than 50 N. The device and its associated mounting means shall remain secure during the installation.

  After the installation, the device, including any associated mounting plate, shall not be damaged.
- If the device is intended to be moved or used in a certain direction, keep the required direction when moving or using the

device. Refer to quick start guide for details.

- CAUTION: If the bracket is designed for a specific device model of our company, use the bracket with the corresponding device only. Use with other devices may result in instability and cause injury. Refer to quick start guide for details.
- CAUTION: If the device needs to be installed with a specific bracket of our company, use the corresponding bracket only. Use others (such as carts, stands, and carriers) may result in instability and cause injury. Refer to the device datasheet for bracket model details. Refer to quick start guide for details.
- The interface varies with the models. Please refer to the product datasheet for details.
- If the device is not released with a power adapter, and you need to wire the bare cables of the device:

  The device external wiring connected to the hazardous live terminals requires installation by an instructed person.

  Make sure that the power has been disconnected before you wire, install, or disassemble the device.

  The power supply or device must be connected to an earthed mains socket-outlet.

  High voltage for the power supply. Do not disassemble it.

  If smoke, odor, or noise arises from the power supply or device, immediately turn off the power, unplug the power cable, and contact the service center.

  If the device needs to be wired by yourself, select the corresponding wire to supply power according to the electric

parameters labeled on the device. Strip off wire with a standard wire stripper at corresponding position. To avoid serious consequences, the length of stripped wire shall be appropriate, and conductors shall not be exposed.

- Make sure that the power has been disconnected before you wire, install, or disassemble the device.
- If smoke, odor, or noise arises from the device, immediately turn off the power, unplug the power cable, and contact the service center.

Table of Contents

1 Appearance Description 1

1.1 Overview 1

1.2 Wiring 2

2 Installation 3

2.1 Install Explosion-Proof Junction Box 3

1 Appearance Description

1.1 Overview

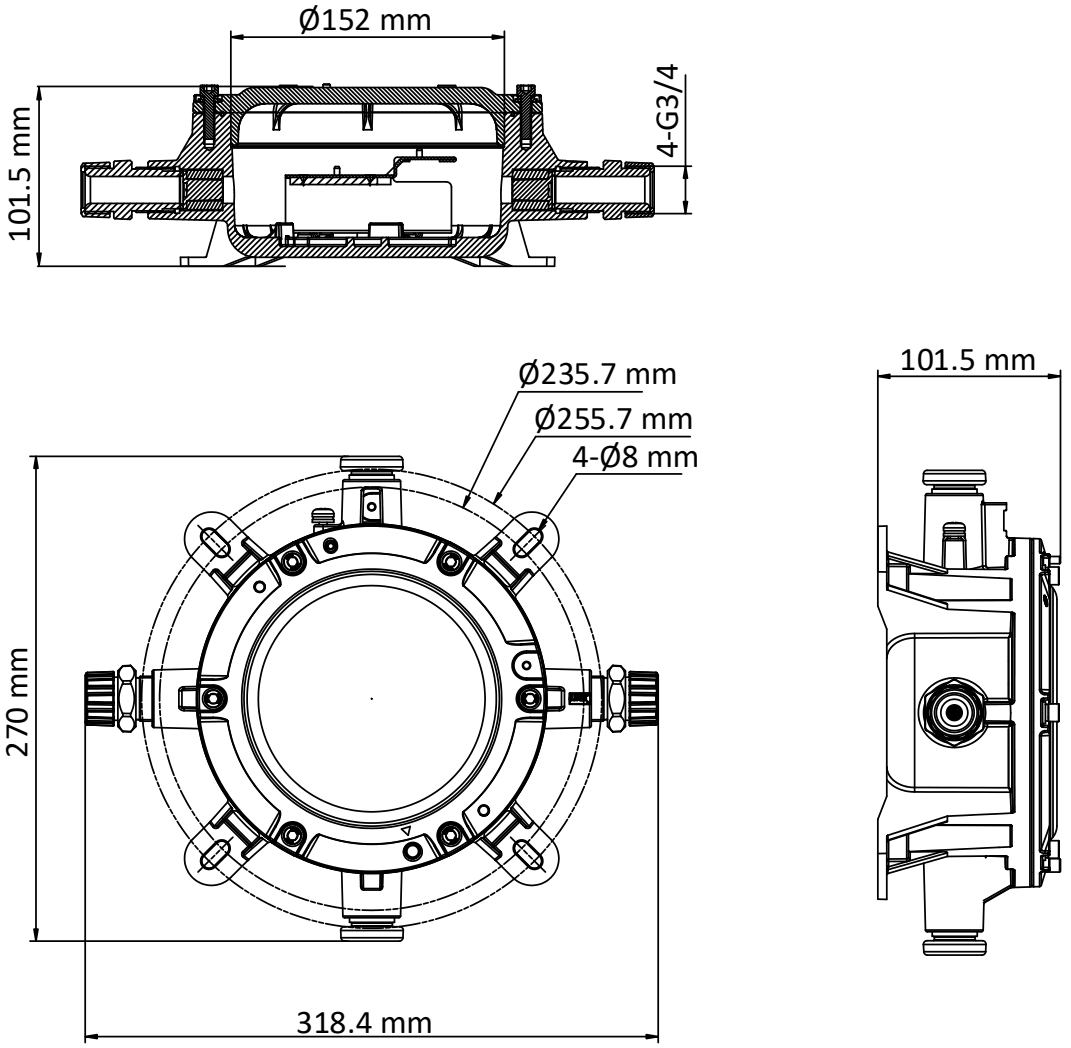

Figure 1-1 Explosion-Proof Junction Box Overview

- The number of terminals: 4
- Thread: M25 × 1.5 explosion-proof thread
- Cable dimension for cable entry: Ø12 mm≤d≤Ø12.5 mm
- Tightening torque of explosion-proof adapter: Max. 36 Nm

1.2 Wiring

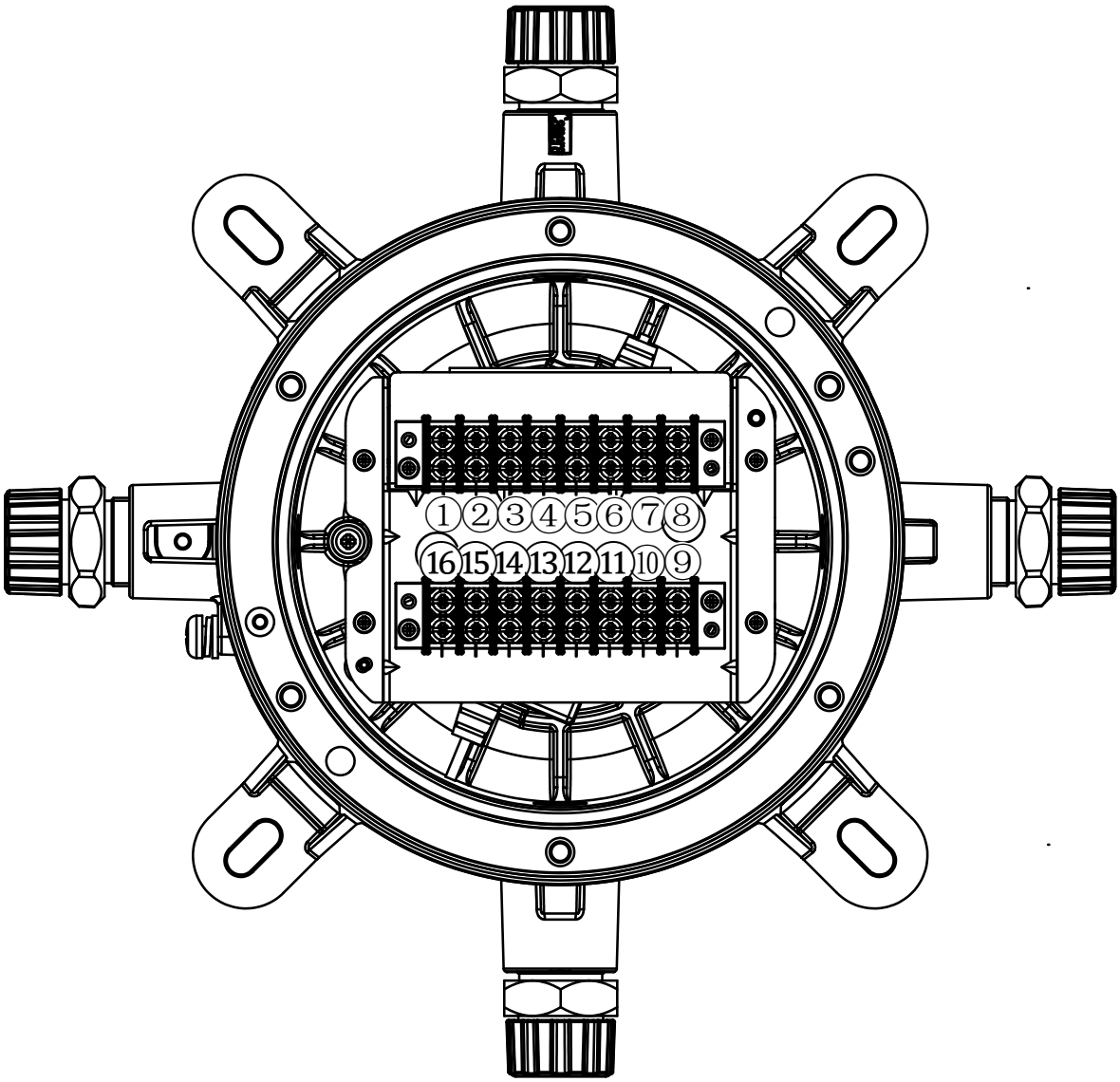

Figure 1-2 Wiring

No.	Description	Specifications of the cables
①, ②, ③, ④, ⑤, ⑥, ⑦, ⑧, ⑨,	Grounding, RS485, Alarm, Audio, etc	Cable: 18 AWG, Cross-sectional area: 0.75

⑩, ⑪, ⑫, ⑬, ⑭, ⑮, ⑯		mm², Rated current: 10 A

2 Installation

Before you start:

- Make sure the device in the package is in good condition and all the assembly parts are included.
- Make sure that the wall is strong enough to withstand four times the weight of the device.

2.1 Install Explosion-Proof Junction Box

Steps:

1. Secure the junction box.

   Drill four screw holes (Ø10 mm) according to the dimension of the junction box, and insert M6 × 60 expansion bolts. Put flat gasket and spring gasket in turn, and tighten the nut to secure the junction box.

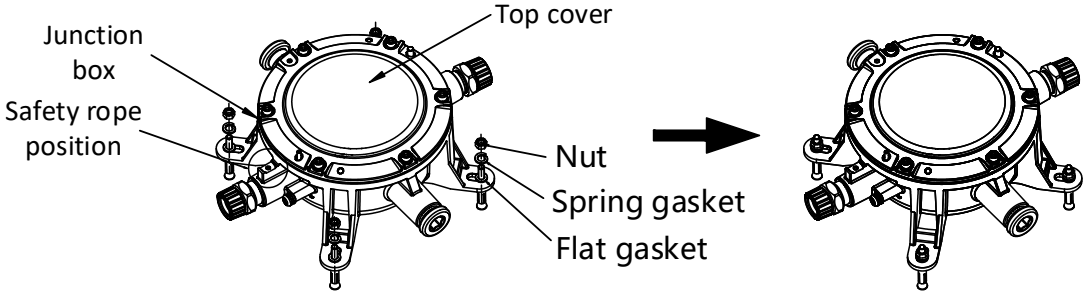

Figure 2-1 Secure Junction box

2. Disassemble the junction box.

1). Loosen the plugs at “Camera” end and its opposite end, and take out the gaskets, T-blinds and the sealing rings. And take out the threaded protectors at the other two ends.

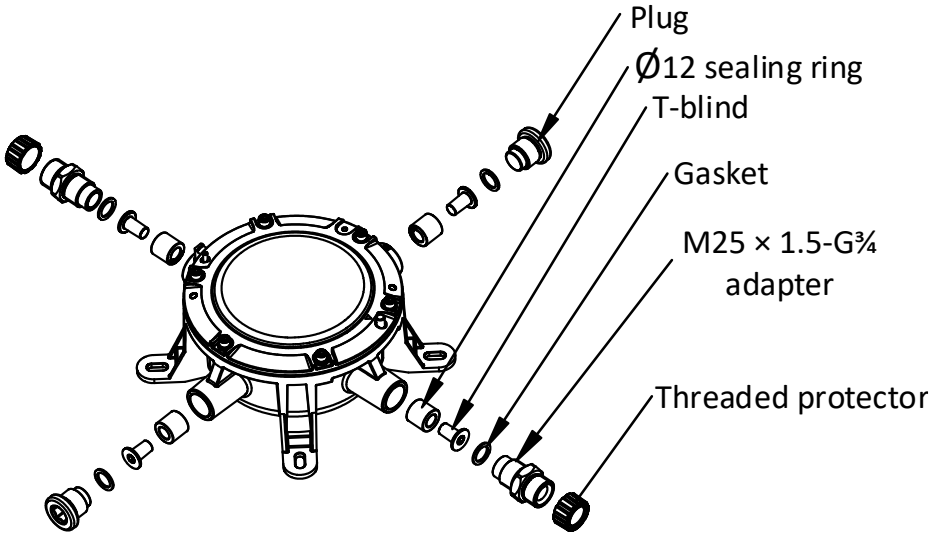

Figure 2-2 Disassemble Junction Box (1)

2). Loosen 6 M6 screws on the top cover, screw two of them into two diagonal M6 threaded holes on the top cover, and take out the top cover gently.

Note

When removing the cover, please keep the explosion suppression surfaces from bump or scratch.

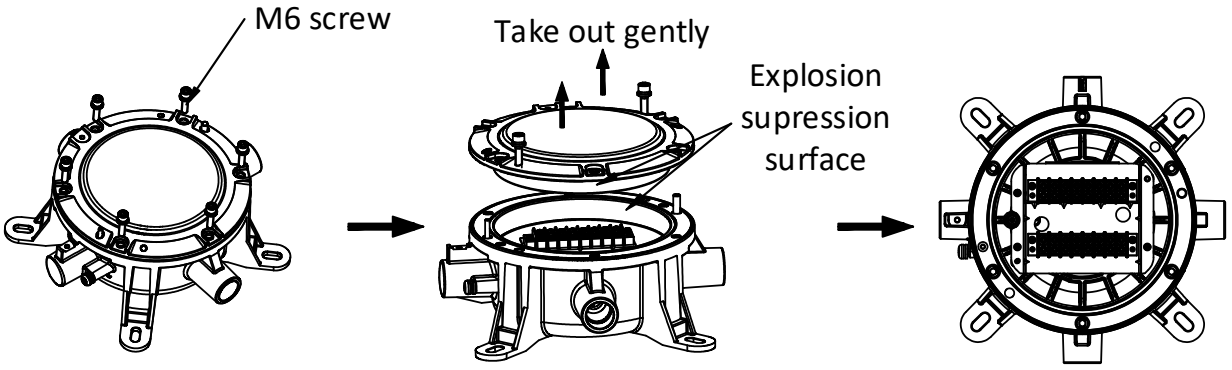

Figure 2-3 Disassemble Junction Box (2)

3. Route cables and wiring.

- Install explosion-proof flexible conduit

  1) Unscrew the threaded protector on the adapter, thread device cable through the sealing ring of the explosion-proof flexible conduit and the adapter in turn, and tighten the adapter on the explosion-proof flexible conduit.

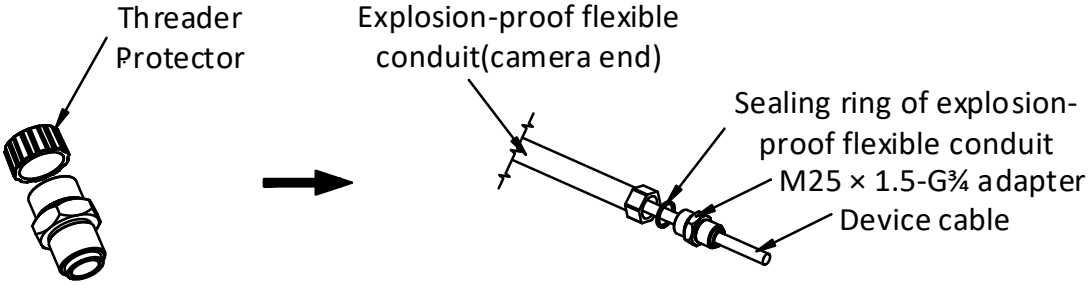

Figure 2-4 Install explosion-proof flexible conduit

  2) Thread device cable through gasket and sealing ring in turn, put adapter on the bellmouth gland nut, and tighten the adapter with wrench. Repeat above steps to route source cables through the opposite end, connect wires and tighten the adapter.

3) If you need other bellmouth gland nuts for wiring, install the camera cable to cable entry (Refer to installation guide of the cable entry for details). Put cable gland sealing ring, and tighten the cable entry with wrench. And connect wires to corresponding terminals, and tighten the sheeting on the terminal.

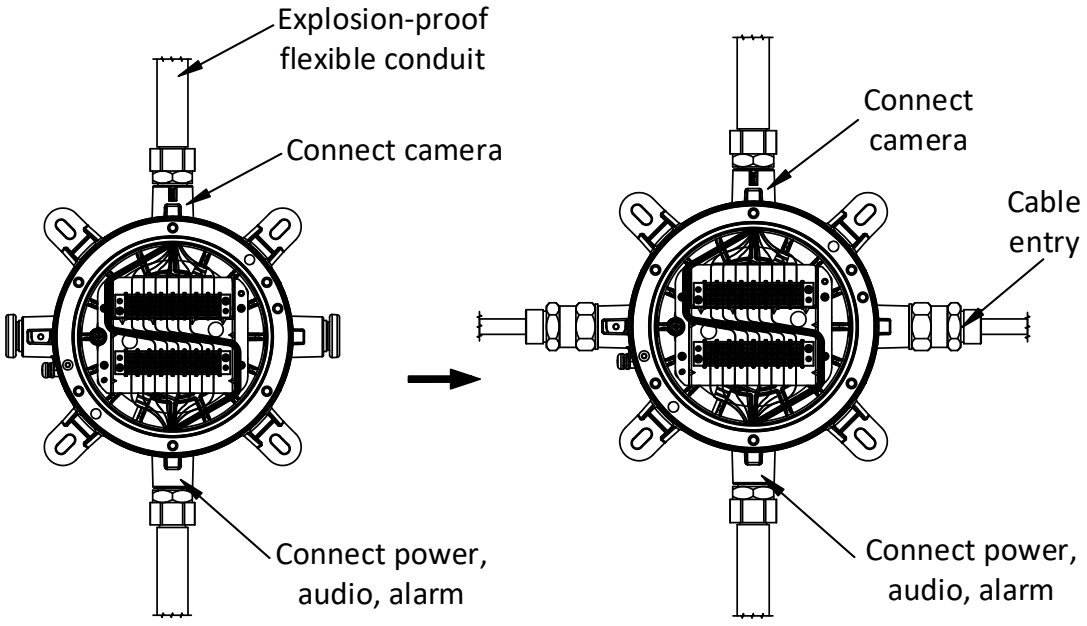

Figure 2-5 Wiring (1)

4) Repeat above steps to route source cables through the opposite end, connect wires and tighten the sheeting.

- No install explosion-proof flexible conduit

1) Thread device cable through adapter, gasket and sealing ring in turn, put adapter on the “Camera” nut base, and tighten the adapter with wrench. Then connect wires to corresponding terminals, and tighten the sheeting on the terminal.

2) Repeat above steps to route source cables through the opposite end, connect wires and tighten the sheeting.

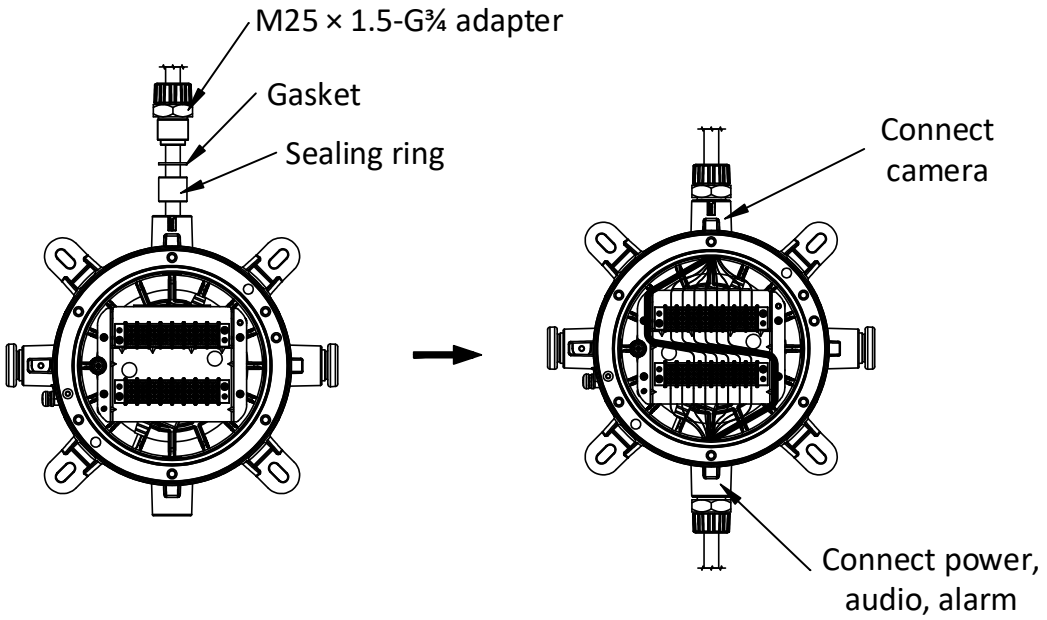

Figure 2-6 Wiring (2)

4. Install the cover back to the junction box.

1). Check to ensure the sealing ring stays flatly in sealing groove.

2). Align the locating hole of the top cover with the locating pin on box, make sure top cover is parallel to flange surface of the cavity, and gently lower the cover back to the box.

Note

When lowering the cover, please keep the explosion suppression surfaces from bump or scratch.

3). Screw 6 M6 screws into 6 threaded holes on the top cover and tighten them.

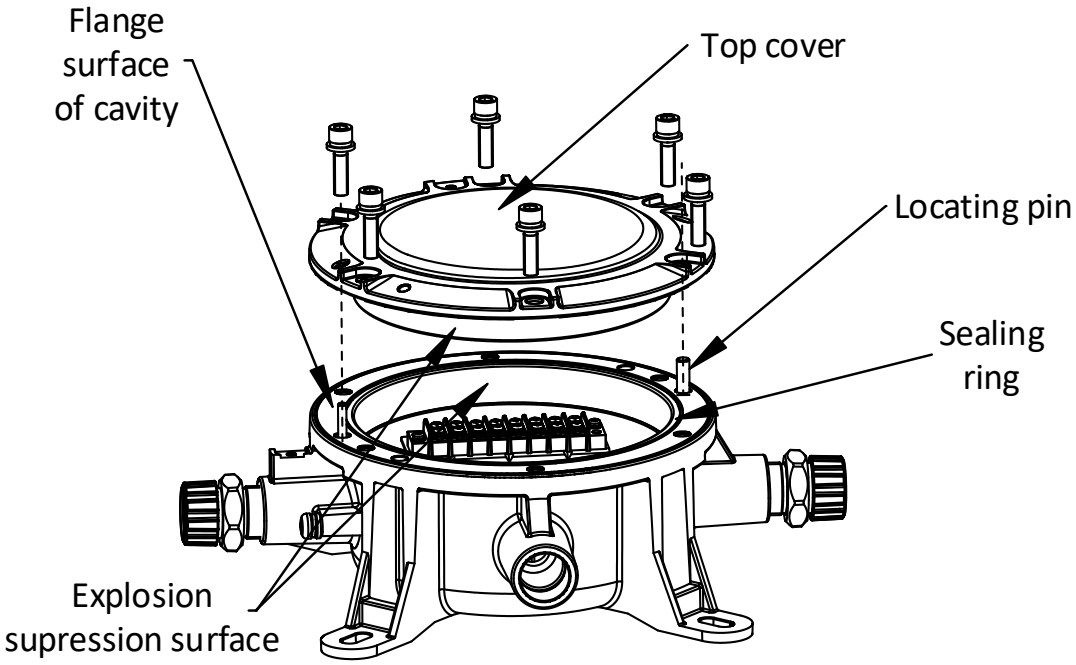

Figure 2-7 Install Cover Back

See Far, Go Further

UD41062B