Outdoor Fixed LED Display Unit

Quick Start Guide

Legal Information

About this Document

- This Document includes instructions for using and managing the Product. Pictures, charts, images and all other information hereinafter are for description and explanation only.
- The information contained in the Document is subject to change, without notice, due to firmware updates or other reasons. Please find the latest version of the Document at the Hikvision website (***https://www.hikvision.com***). Unless otherwise agreed, Hangzhou Hikvision Digital Technology Co., Ltd. or its affiliates (hereinafter referred to as "Hikvision") makes no warranties, express or implied.
- Please use the Document with the guidance and assistance of professionals trained in supporting the Product.

About this Product

This product can only enjoy the after-sales service support in the country or region where the purchase is made.

Acknowledgment of Intellectual Property Rights

- Hikvision owns the copyrights and/or patents related to the technology embodied in the Products described in this Document, which may include licenses obtained from third parties.
- Any part of the Document, including text, pictures, graphics, etc., belongs to Hikvision. No part of this Document may be excerpted, copied, translated, or modified in whole or in part by any means without written permission.
- **HIKVISION** and other Hikvision's trademarks and logos are the properties of Hikvision in various jurisdictions.
- Other trademarks and logos mentioned are the properties of their respective owners.
- HDMI™ HIGH-DEFINITION MULTIMEDIA INTERFACE The terms HDMI, HDMI High-Definition Multimedia Interface, HDMI Trade dress and the HDMI Logos are trademarks or registered trademarks of HDMI Licensing Administrator, Inc.

LEGAL DISCLAIMER

- TO THE MAXIMUM EXTENT PERMITTED BY APPLICABLE LAW, THIS DOCUMENT AND THE PRODUCT DESCRIBED, WITH ITS HARDWARE, SOFTWARE AND FIRMWARE, ARE PROVIDED "AS IS" AND "WITH ALL FAULTS AND ERRORS". HIKVISION MAKES NO WARRANTIES, EXPRESS OR IMPLIED, INCLUDING WITHOUT LIMITATION, MERCHANTABILITY, SATISFACTORY QUALITY, OR

FITNESS FOR A PARTICULAR PURPOSE. THE USE OF THE PRODUCT BY YOU IS AT YOUR OWN RISK. IN NO EVENT WILL HIKVISION BE LIABLE TO YOU FOR ANY SPECIAL, CONSEQUENTIAL, INCIDENTAL, OR INDIRECT DAMAGES, INCLUDING, AMONG OTHERS, DAMAGES FOR LOSS OF BUSINESS PROFITS, BUSINESS INTERRUPTION, OR LOSS OF DATA, CORRUPTION OF SYSTEMS, OR LOSS OF DOCUMENTATION, WHETHER BASED ON BREACH OF CONTRACT, TORT (INCLUDING NEGLIGENCE), PRODUCT LIABILITY, OR OTHERWISE, IN CONNECTION WITH THE USE OF THE PRODUCT, EVEN IF HIKVISION HAS BEEN ADVISED OF THE POSSIBILITY OF SUCH DAMAGES OR LOSS.

- YOU ACKNOWLEDGE THAT THE NATURE OF THE INTERNET PROVIDES FOR INHERENT SECURITY RISKS, AND HIKVISION SHALL NOT TAKE ANY RESPONSIBILITIES FOR ABNORMAL OPERATION, PRIVACY LEAKAGE OR OTHER DAMAGES RESULTING FROM CYBER-ATTACK, HACKER ATTACK, VIRUS INFECTION, OR OTHER INTERNET SECURITY RISKS; HOWEVER, HIKVISION WILL PROVIDE TIMELY TECHNICAL SUPPORT IF REQUIRED.
- YOU AGREE TO USE THIS PRODUCT IN COMPLIANCE WITH ALL APPLICABLE LAWS, AND YOU ARE SOLELY RESPONSIBLE FOR ENSURING THAT YOUR USE CONFORMS TO THE APPLICABLE LAW. ESPECIALLY, YOU ARE RESPONSIBLE, FOR USING THIS PRODUCT IN A MANNER THAT DOES NOT INFRINGE ON THE RIGHTS OF THIRD PARTIES, INCLUDING WITHOUT LIMITATION, RIGHTS OF PUBLICITY, INTELLECTUAL PROPERTY RIGHTS, OR DATA PROTECTION AND OTHER PRIVACY RIGHTS. YOU SHALL NOT USE THIS PRODUCT FOR ANY PROHIBITED END-USES, INCLUDING THE DEVELOPMENT OR PRODUCTION OF WEAPONS OF MASS DESTRUCTION, THE DEVELOPMENT OR PRODUCTION OF CHEMICAL OR BIOLOGICAL WEAPONS, ANY ACTIVITIES IN THE CONTEXT RELATED TO ANY NUCLEAR EXPLOSIVE OR UNSAFE NUCLEAR FUEL-CYCLE, OR IN SUPPORT OF HUMAN RIGHTS ABUSES.
- IN THE EVENT OF ANY CONFLICTS BETWEEN THIS DOCUMENT AND THE APPLICABLE LAW, THE LATTER PREVAILS.

© Hangzhou Hikvision Digital Technology Co., Ltd. All rights reserved.

Applicable Models

This manual is applicable to the models listed in the following table.

Series	Model
DS-D42XXCX-1AAB	DS-D4239CD-1AAB
	DS-D4248CD-1AAB
	DS-D4239CF-1AAB
	DS-D4248CF-1AAB

Symbol Conventions

The symbols that may be found in this document are defined as follows.

Symbol	Description
Note	Provides additional information to emphasize or supplement important points of the main text.
Caution	Indicates a potentially hazardous situation, which if not avoided, could result in equipment damage, data loss, performance degradation, or unexpected results.
Danger	Indicates a hazard with a high level of risk, which if not avoided, will result in death or serious injury.

Safety Instructions

Caution

- The reduce the risk of fire or electric shock, please do not expose the device to rain or humid environment.
- The device may generate radio interference in indoor environment. Necessary precautions may be required.
- Electric discharge may last for a short period of time after the power is shut down. Please wait two minutes after the power is shut down before operating the device.
- To avoid the risk of electric shock, please do not operate when the power is on.
- Please do not plug and unplug the power cable when the power is on.
- Ensure correct voltage and wiring of the terminals for connection to mains supply.
- The device is only suitable for installation on the concrete or non-flammable surfaces, to prevent molten material from dripping to the bottom during fire caused by internal failure.

- Keep 90 degrees when moving and using the device.
- Do not place anything containing liquid on the device to avoid the risk of fire or electric shock caused by liquid-splashing.
- Install the device no more than 5 mm away from the wall or other metal racks in case of lamp board drop resulting in electric shock.
- After installation, there should be no openings around the LED module. The bottom bracket under the wire outlet position should completely cover the bottom hole only to let the wire out, to prevent the molten material from dripping to the bottom during fire caused by internal failure.
- To ensure safety, the installation parts and the wall should support four times the weight of the device.

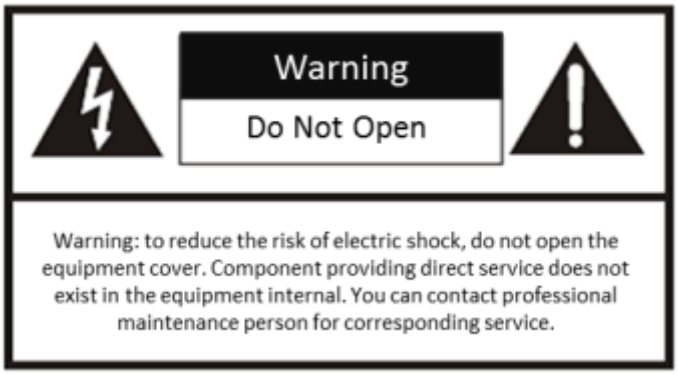

Warning

- In the use of the product, you must be in strict compliance with the electrical safety regulations of the nation and region.
- The device shall not be exposed to water dripping or splashing, and no objects filled with liquids, such as vases, shall be placed on the device.
- The protective grounding of the device should be reliably connected to the building protective grounding.
- Do not touch the bare components (such as the metal contacts of the inlets) and wait for at least 5 minutes, since electricity may still exist after the device is powered off.
- + identifies the positive terminals of the device which is used with, or generates direct current, and - identifies the negative terminal(s) of the device which is used with, or generates direct current.
- No naked flame sources, such as lighted candles, should be placed on the device.
- Install the device according to the instructions in Quick Start Guide.
- To prevent injury, this device must be securely attached to the installation surface in accordance with the installation instructions.
- Never place the device in an unstable location. The device may fall, causing serious personal injury or death.

- The additional force shall be equal to three times the weight of the device but not less than 50 N. The device and its associated mounting means shall remain secure during the installation. After the installation, the device, including any associated mounting plate, shall not be damaged.
- The interface varies with the models. Please refer to the product datasheet for details.
- If the device needs to be wired by yourself, select the corresponding wire to supply power according to the electric parameters labeled on the device. Strip off wire with a standard wire stripper at corresponding position. To avoid serious consequences, the length of stripped wire shall be appropriate, and conductors shall not be exposed.
- Make sure that the power has been disconnected before you wire, install, or disassemble the device.
- If smoke, odor, or noise arises from the power supply or device, immediately turn off the power, unplug the power cable, and contact the service center.
- The equipment has been designed, when required, modified for connection to an IT power distribution system.
- NEVER place items that might tempt children to climb, such as toys and remote controls, on the top of the equipment.
- CAUTION: This bracket is intended for use only with LED display unit. Use with other equipment may result in instability causing injury.
- This device is suitable for mounting on concrete or other non-combustible surface only to avoid fire hazard.
- The power supply or device must be connected to an earthed mains socket-outlet.
- High voltage for the power supply. Do not disassemble it.
- An all-pole mains switch shall be incorporated in the electrical installation of the building.
- A readily accessible disconnect device shall be incorporated external to the equipment, rated 220/230/240 VAC, 6 A for each device. A single device is recommended for AC 220 V/ 230 V/ 240 V, 6 A circuit breakers. When multiple devices are superimposed, a suitable circuit breaker should be selected according to the total rated current, but it must not exceed the building equipped circuit specifications.
- To reduce the risk of electric shock, install protective shield on the exposed connector after installing LED screen.
- The power supply or device must be connected to an earthed mains socket-outlet.
- High voltage for the power supply. Do not disassemble it.
- CAUTION: This device is for use only with LED bracket. Use with other (carts, stands, or carriers) may result in instability causing injury.
- The device external wiring connected to the hazardous live terminals requires installation by an instructed person.
- To reduce the risk of electric shock, install protective shield on the exposed connector after installing LED screen.
- Disconnect the power plug before installing the protective shield.

- Disconnect the power plug before maintenance.
- Make sure the power supply is well-grounded.
- The external wire connection between device and hazardous electronic terminals should be operated by professionals.
- Please strictly follow the installation method in this guide.
- To prevent injury, the device must be securely fixed to the ground, wall, ceiling, or steel frame. The all-in-one rack should be fixed to the ground with expansion screws.
- The supporting rack can only be used with the device. Using it with other devices may cause instability and injury.
- The device can only be used with the supporting rack. Using it with other equipment (such as a cart, shelf, or handling device) may cause instability and injury.
- This is a class A product and may cause radio interference in which case the user may be required to take adequate measures.

TABLE OF CONTENTS

Chapter 1 Product Introduction 1
1.1 Overview 1
1.2 Product Components 1
Chapter 2 Rack Installation 2
2.1 Precaution 2
2.2 Install the Rack 2
2.2.1 Prepare Tools and Devices 2
2.2.2 Install the Rack 3
Chapter 3 Cabinet Installation 6
3.1 Introduction 6
3.1.1 About Cabinet 6
3.1.2 Load Capability of Cabinet 6
3.1.3 Cabinet Overview 6
3.2 Install Cabinet 8
3.2.1 Precautions 8
3.2.2 Stitch Cabinet Frames 8
3.3 Connect Power Cord and Network Cable 12
3.3.1 Connect Power Cord 12
3.3.2 Connect Network Cable 15
3.4 Maintenance 18
3.4.1 Maintain Lamp Board 18
3.4.2 Maintain Power Supply Box 22
Chapter 4 Software Debugging 24

Chapter 1 Product Introduction

1.1 Overview

Outdoor fixed LED display unit (hereinafter referred to as the device, the product, or the LED) is a new generation of full-color fine pitch outdoor LED display unit. It adopts aluminum profile cabinets with concise appearance. The aluminum modules highly improve the heat dissipation performance of the whole device. It features in IP66 protection level, guaranteeing the normal running in various severe environments. The highest brightness reaches 6000 to guarantee the display effect even in high brightness regions. It is applicable to various scenarios such as the outdoor billboards, outdoor walls, and roofs.

1.2 Product Components

An LED control system includes sending and receiving cards. The sending card packages images and sends them to the receiving card. The receiving card unpackages and processes the images, and then displays the images on the LED display unit.

The center distance between two pixels is called pixel pitch. The smaller pixel pitch results in higher pixel density per unit area, higher resolution and higher cost. For example, P1.2 indicates 1.2 mm pixel pitch.

Chapter 2 Rack Installation

2.1 Precaution

Read the following precaution tips when you install the rack:

- All installation personnel must adhere to safety regulations by wearing protective equipment, such as safety helmets, safety belts, and reflective vests, when working at heights.
- Before using common climbing tools like scaffolding and miter ladder, it is essential to conduct a thorough inspection to ensure that these tools are in good condition and the ground is flat and stable. Climbing tools with potential safety risks should not be used.
- Verify that all connectors are firmly installed and that structural components and fasteners are in good place.
- After installing accessories, clean up all debris in the cabinets. It is prohibited to leave any metal debris.
- The overall horizontal error of the rack should be less than 3 mm, the vertical error should range from 1 mm to 3 mm. The distance error between two vertical racks should also range from 1 mm to 3 mm.
- After the installation is finished, the rack frame should keep vertical to the ground. No rack is tilted forward, inclined, or twisted.

2.2 Install the Rack

2.2.1 Prepare Tools and Devices

The tools and devices that may be used in the process of actual installation are listed in the following table.

Table 2-1 List of Tools and Devices

Tools and Devices	Function
Steel cutting machine	Cutting steel pipe
Welding machine	Welding rack
Drill/Electric drill	Drilling
Electric hammer	Punching
Infrared levels/lifting hammers	Structural component testing and calibration
Adjustable wrench/Allen wrench	Fixing fasteners and bolts
Aerial Vehicle	Using in aerail work area

Tools and Devices	Function
Crane	Lifting devices

2.2.2 Install the Rack

Rack Installation Flowchart

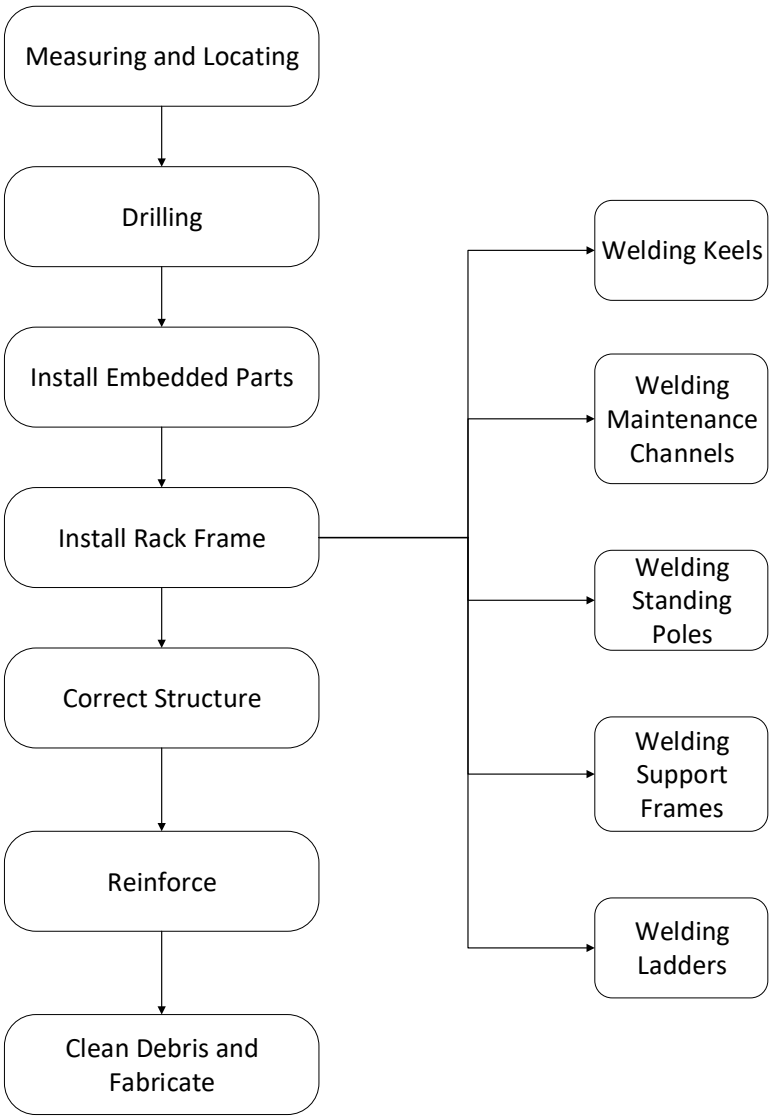

Figure 2-1 Rack Installation Flowchart

Install the Rack

Make an installation scheme of welding rack according to the installation location and the size of the LED display.

Step 1 Materials and devices preparation. Cut and weld the steels to make rack frames including horizontal rack, vertical rack, and maintenance channel.

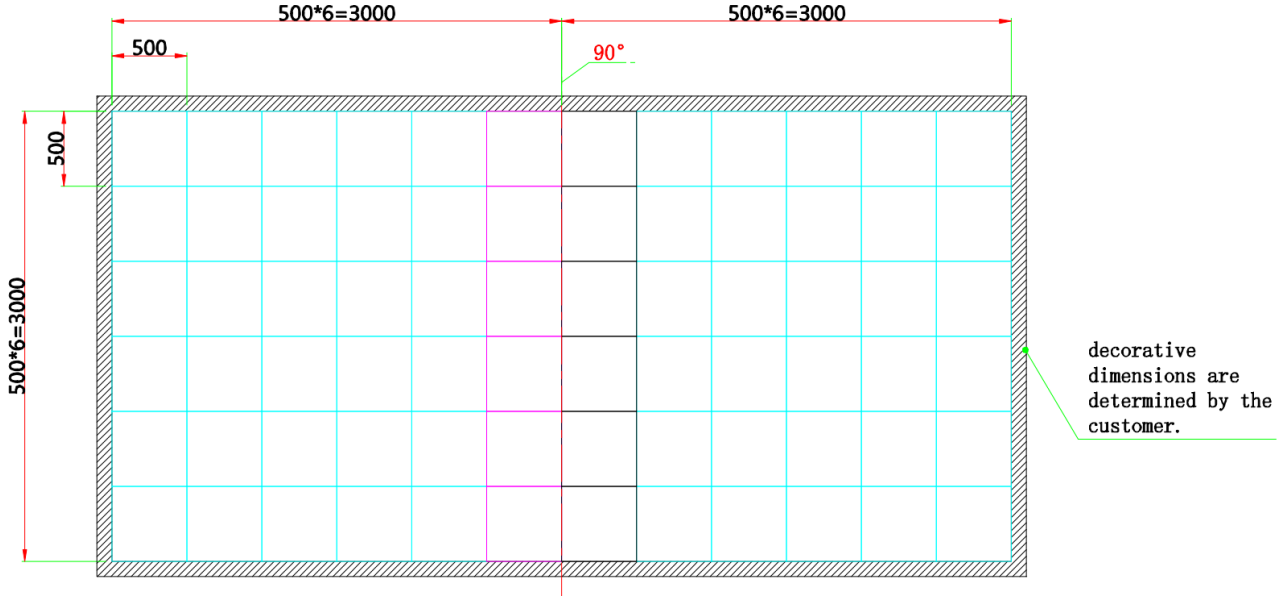

Figure 2-2 Rack Frame (Front View)

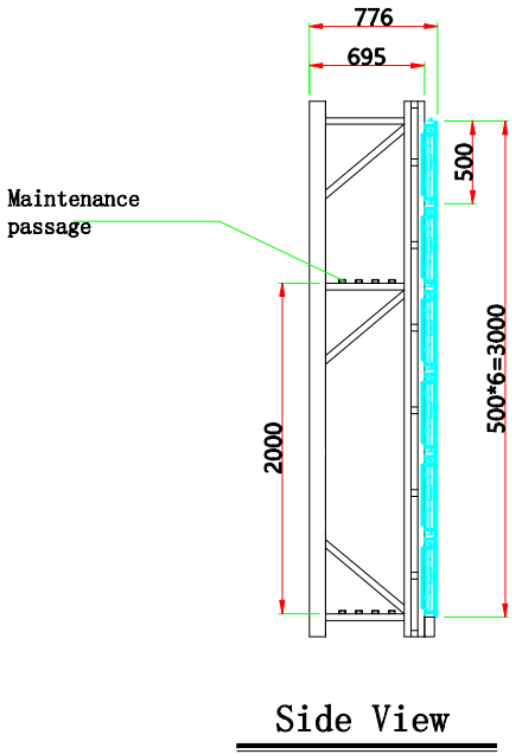

Figure 2-3 Rack Frame (Side View)

Step 2 Fix the rack frame to the wall.

The rack frame can be welded and assembled on the ground before using a crane to lift it into the reserved place if the site condition is allowed.

If hoisting installation is not allowed, it is needed to design a specialized installation plan based on the actual situation by the construction team.

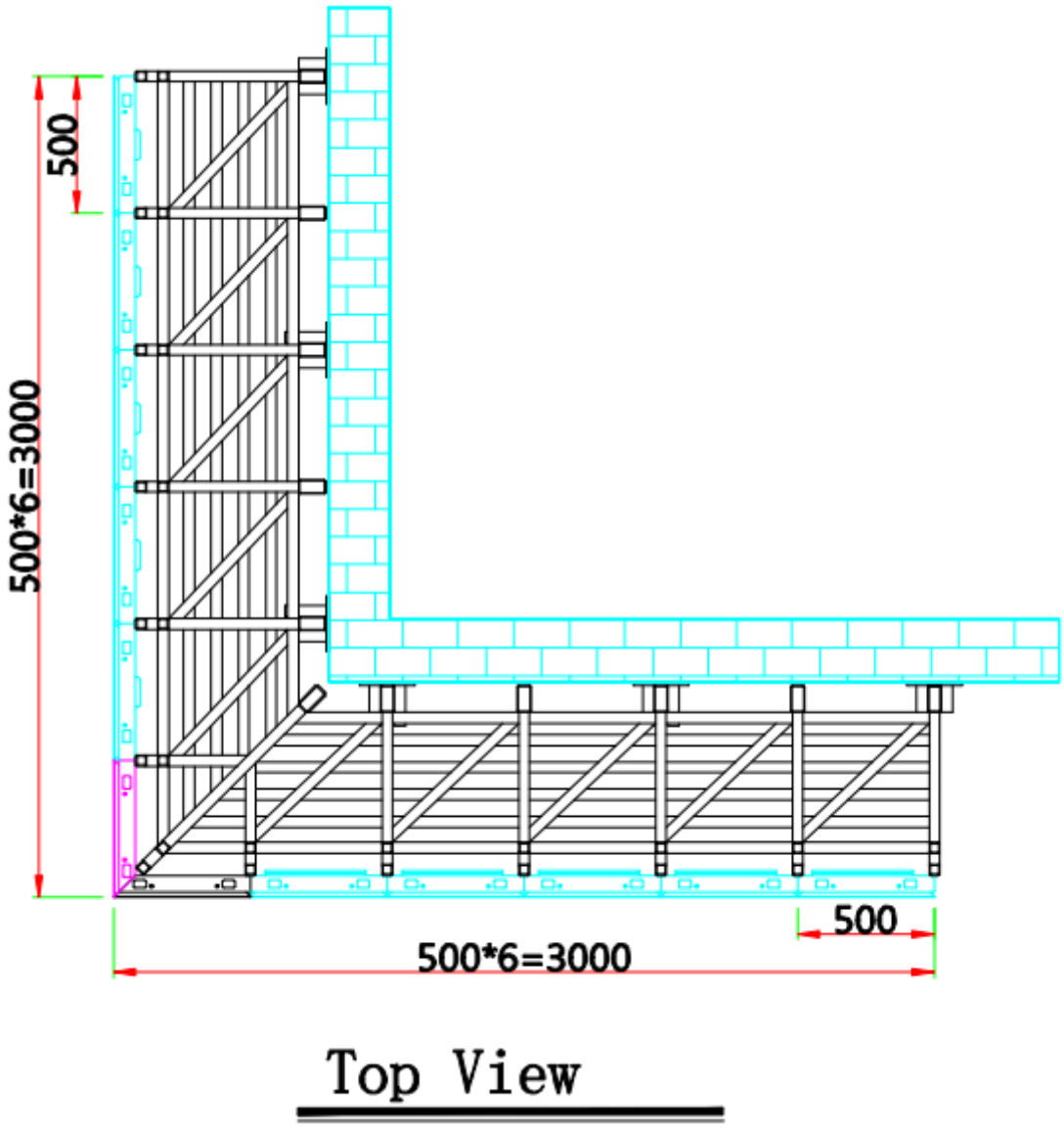

Figure 2-4 Fix the Rack Frame to the Wall (Top View)

Chapter 3 Cabinet Installation

3.1 Introduction

3.1.1 About Cabinet

A cabinet is a basic unit for LED engineering installation in which LED modules are neatly mounted on a metal sheet (cast aluminum) box, with a built-in independent receiving card and switching power supply, an engineering installation structure, and independent display.

3.1.2 Load Capability of Cabinet

Load Capability of Network Interfaces

The load capability of a single network interface of the sending card is limited. You can calculate the max load of a single network interface by the following formula.

Max Load of a Network Interface = Pixel Capacity of a Network Interface/Cabinet Resolution

Example

If equipped with a sending card of 650,000 pixels, the max load of a single network interface for a P1.2 cabinet of 480 × 270 resolution is 5 cabinets.

Note

You can choose sending cards of different pixels and cabinets of different resolution, and calculate the load capability by the formula.

Load Capability of Power Cords

The load capability of a single power cord is limited. You can calculate the max load of a single power cord by the following formula.

Max Load of a Single Power cord = Power of the Cord/Power of the Cabinet

Note

You can choose power cords and cabinets of different specifications, and calculate the load capability by the formula.

3.1.3 Cabinet Overview

Each cabinet is equipped with a power supply box. The power cord and network cable are already connected with the power supply box and hidden in the wire hidden box after the device leaves factory.

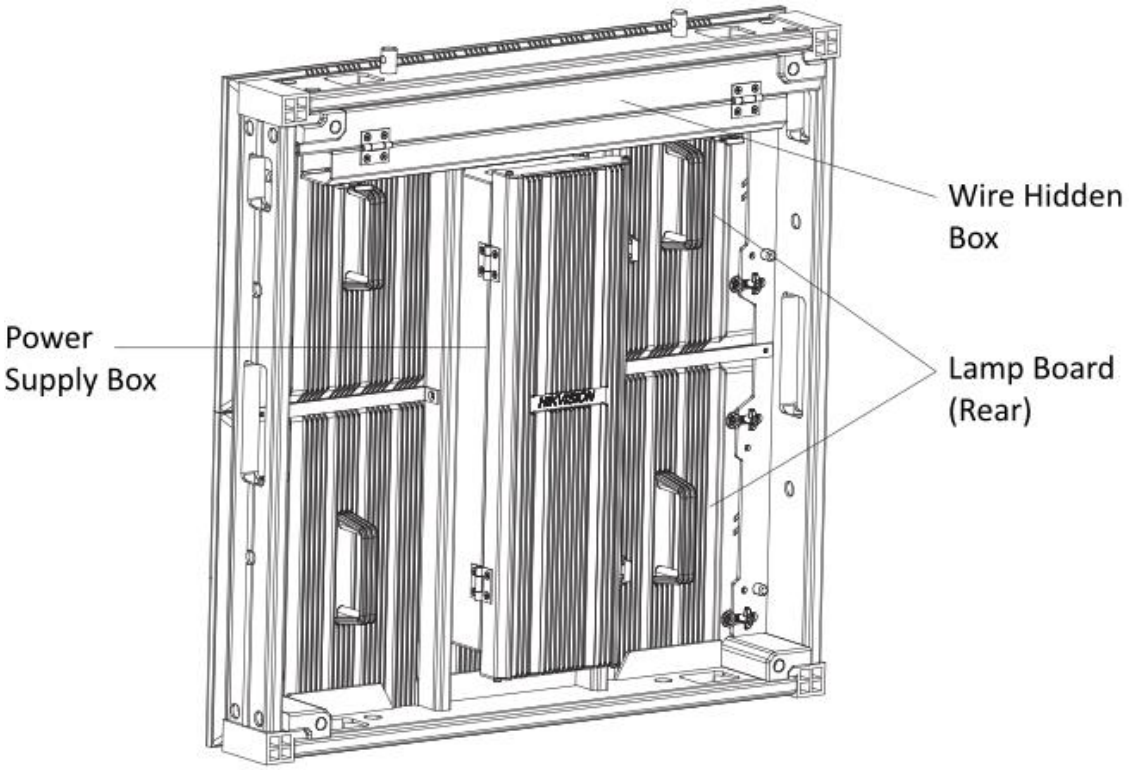

Figure 3-1 Cabinet Overview (Rear)

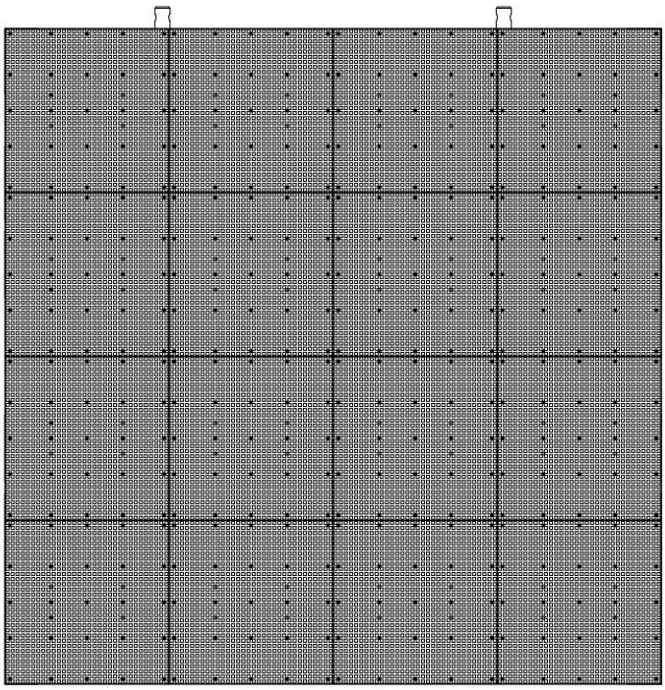

Figure 3-2 Cabinet Overview (Front)

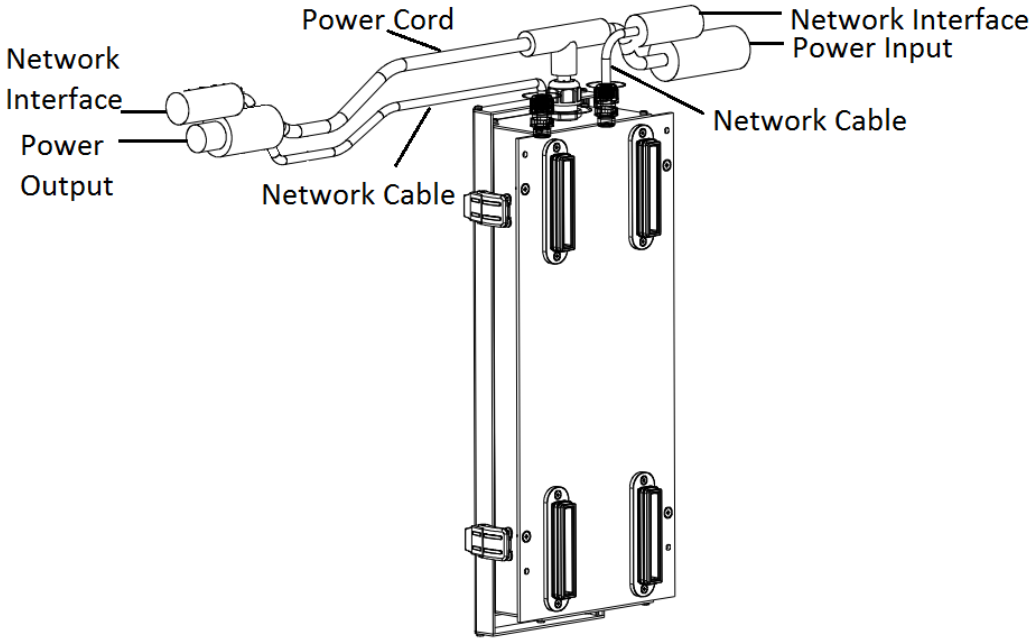

Figure 3-3 Power Supply Box Overview

Note

The figures are for reference only. The actual device prevails.

3.2 Install Cabinet

3.2.1 Precautions

Read the following precaution tips before you install the device:

- Electric discharge may last for a short period of time after the power is shut down. Please wait two minutes after the power is shut down to operate the device.
- Only use the original power cord delivered with the device. Contact authorized dealer to purchase power cord with same specifications.
- Please do not frequently plug and unplug the power cord when the power is on.

3.2.2 Stitch Cabinet Frames

Cabinet Frame Locating

Align two cabinet frames with the locating studs, locating holes, and installation holes. Each cabinet frame is equipped with two vertical locating studs, two vertical locating holes, and two sets of horizontal installation holes.

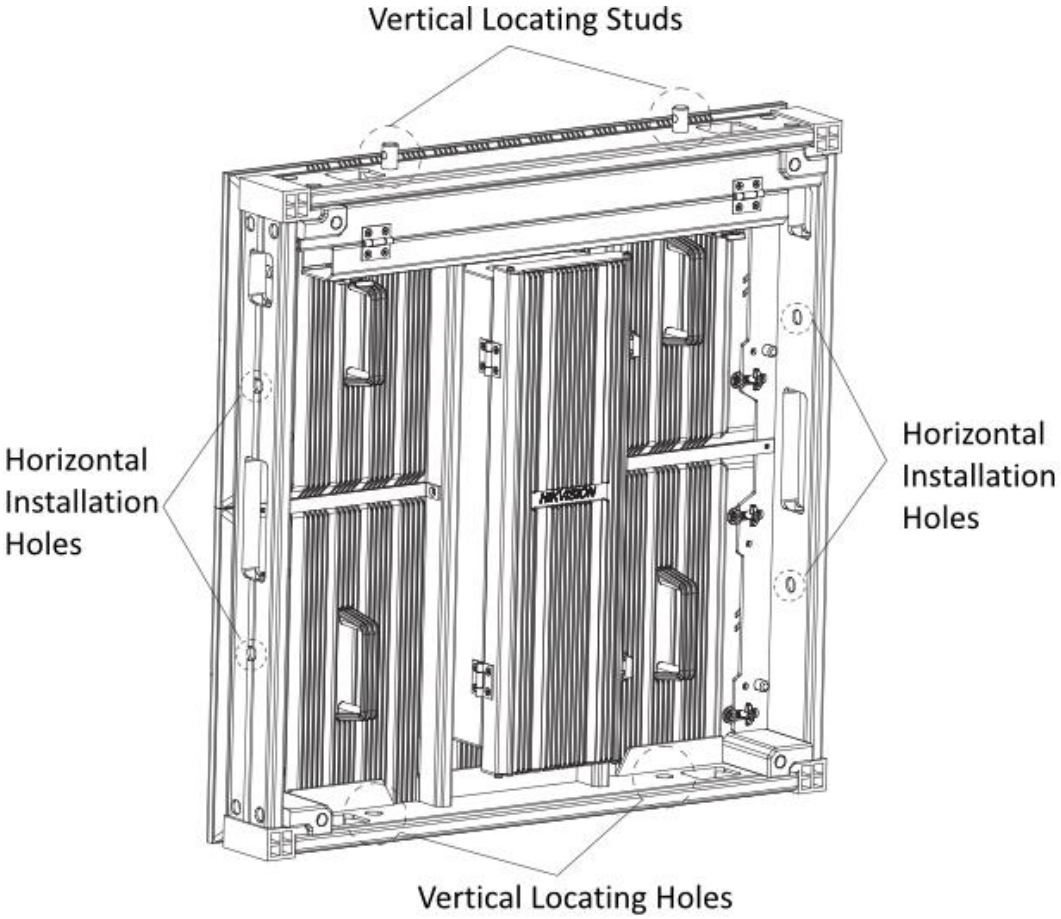

Figure 3-4 Cabinet Frame Locating

Stitch Cabinet Frames Horizontally

Step 1 Align the installation holes in the horizontal direction of the two adjacent cabinet frames, and adjust the cabinet frames to the relative height.

Step 2 Insert two M10 hex screws into the installation holes, and fasten the screws with nuts.

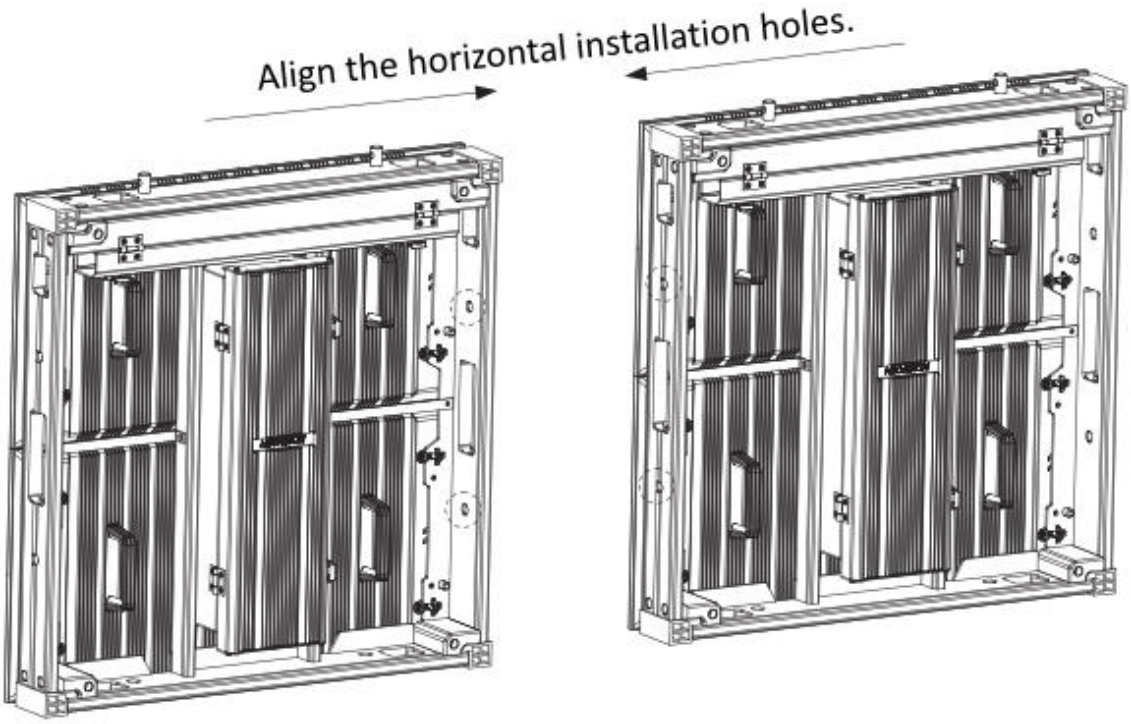

Figure 3-5 Stitch Cabinet Frames Horizontally

Stitch Cabinet Frames Vertically

Align the locating studs in the vertical direction of the two adjacent cabinet frames to the locating holes, and adjust the cabinet frames vertically against each other.

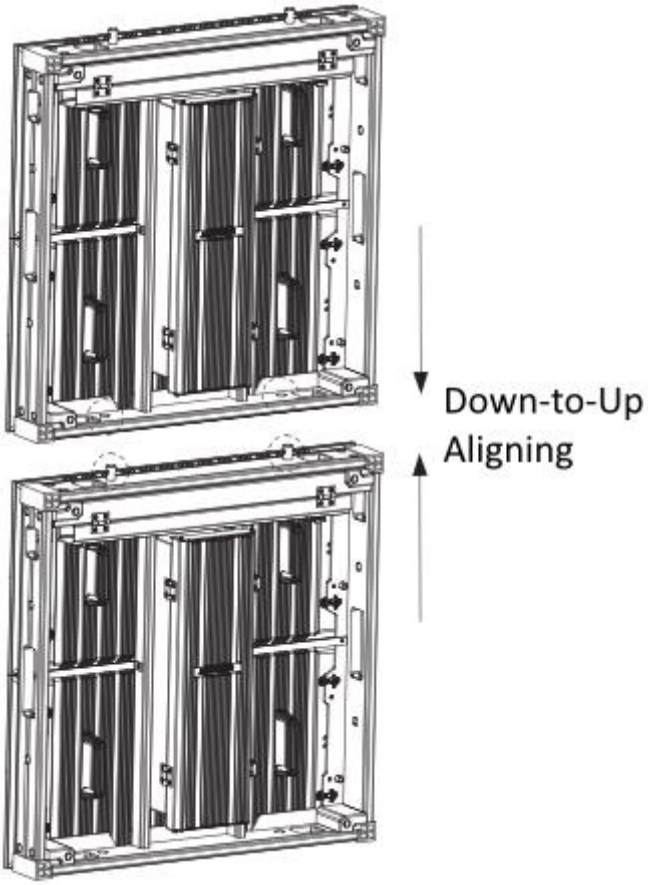

Figure 3-6 Stitch Cabinet Frames Vertically

After the horizontal and vertical stitching, a complete LED display unit is stitched.

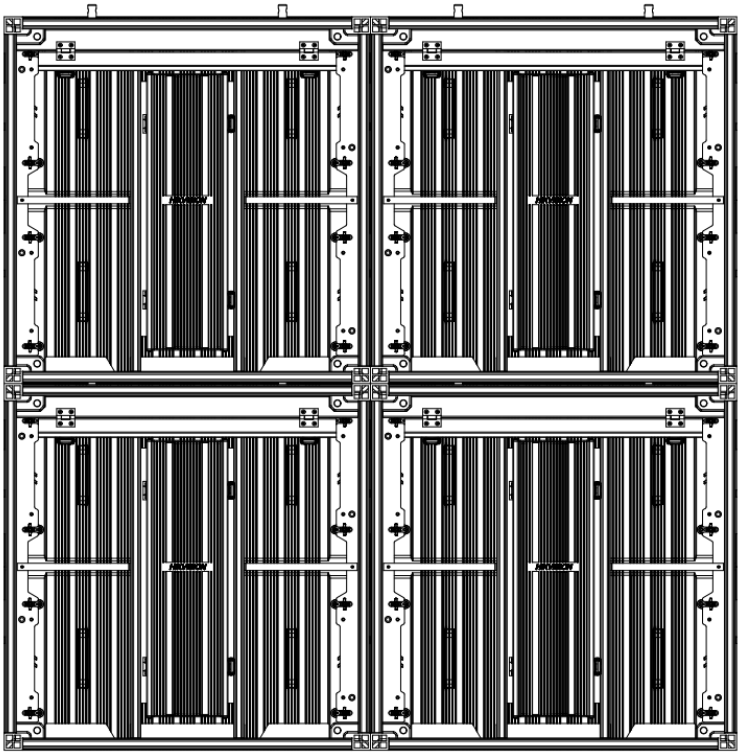

Figure 3-7 Stitched LED Display Unit (2 × 2 for Example)

3.3 Connect Power Cord and Network Cable

3.3.1 Connect Power Cord

Each cabinet is equipped with a power input cord and a power output cord internally. The internal power cords can be connected in cascade in each row, and the external power cords are needed according to the load capacity of the external power cords.

Step 1 Unlock the two buckles on the wire hidden box to open it for each cabinet.

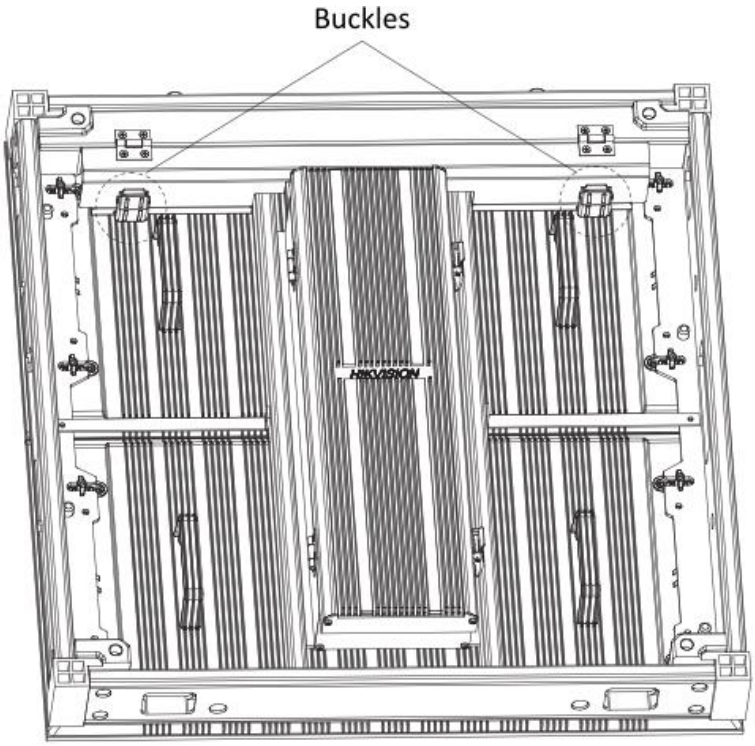

Figure 3-8 Open Wire Hidden Box

Step 2 Connect the external power supply to the power input interface of the first cabinet in each row.

Step 3 Connect the internal power cords within the max load. Connect the power output interface of one cabinet to the power input interface of the adjacent cabinet horizontally through the wiring holes in each row.

As the figure shown below, the left cabinet is the first cabinet in the row. Connect the external power supply to interface 1, connect interface 2 to 3, and connect interface 4 to another power input interface of another cabinet in the row.

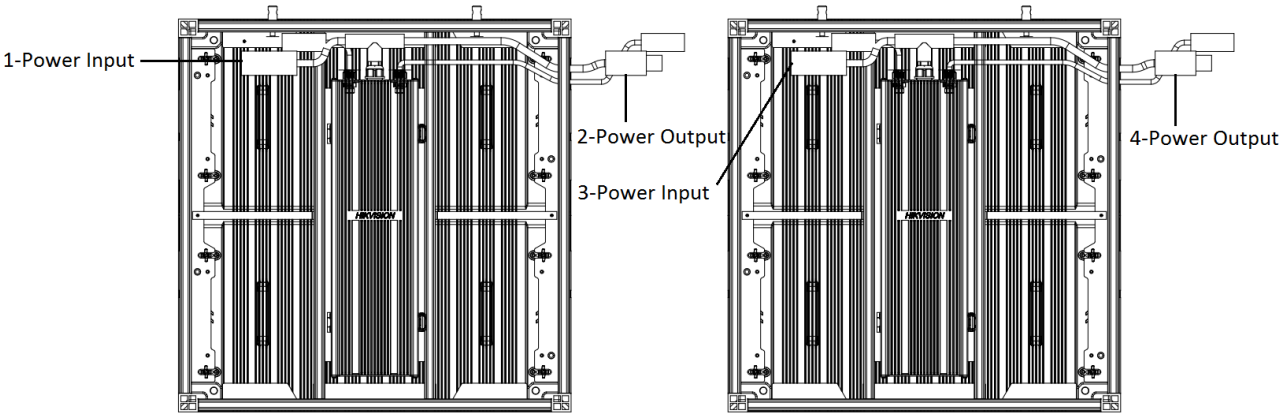

Figure 3-9 Connect Power Cord

Step 4 (Optional) If the actual number of cabinets exceeds the max load of the power cord, connect the power input interface of the overloaded cabinet in each row to another external power cord through the wiring holes.

The figures below take 4 × 4 cabinets (within the max. load of the power cord) and 4 × 7 cabinets (4 × 4 within the max. load and 4 × 3 beyond the max. load of the power cord) for example.

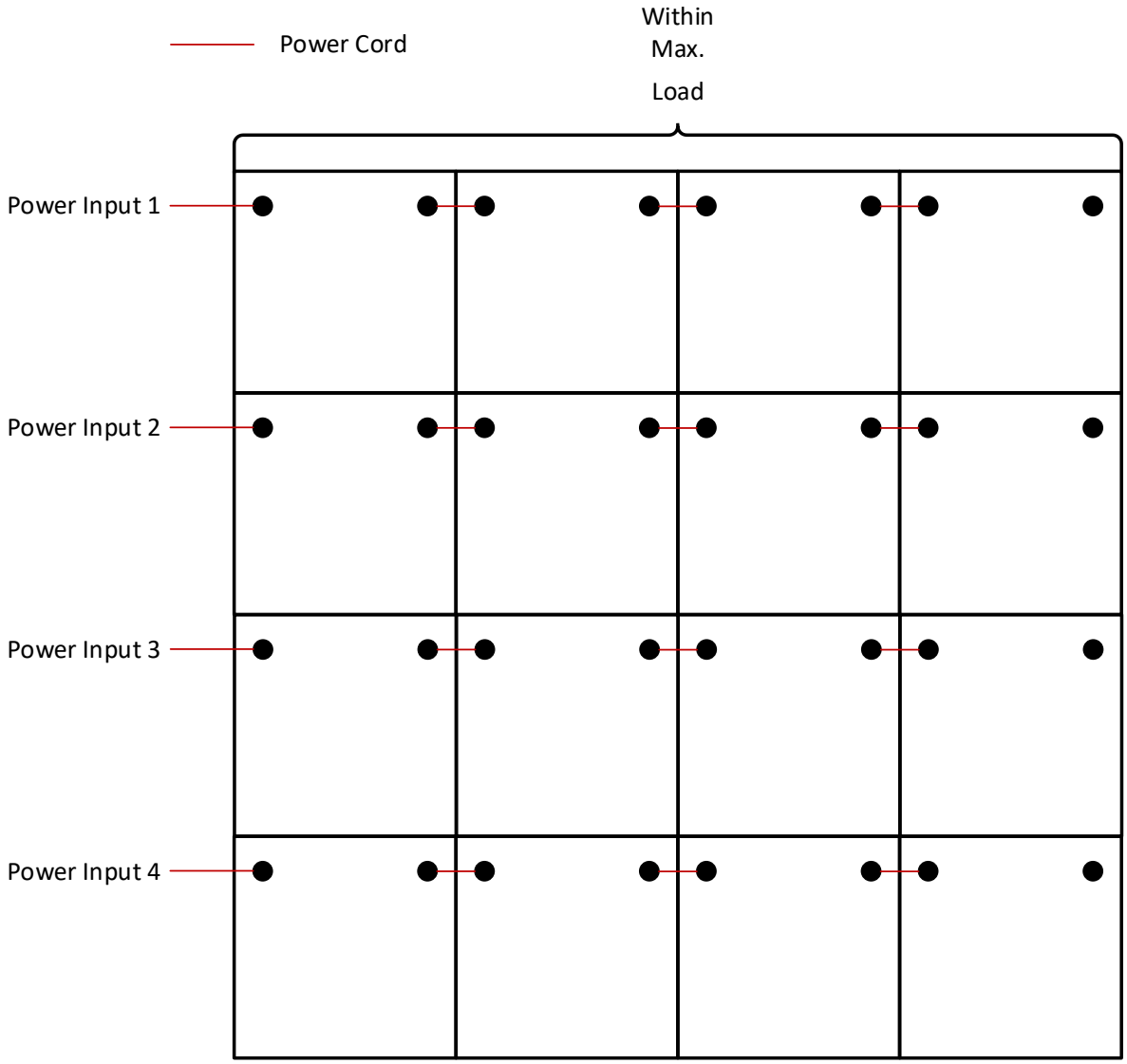

Figure 3-10 Power Cord Connection Diagram (Within Max. Load)

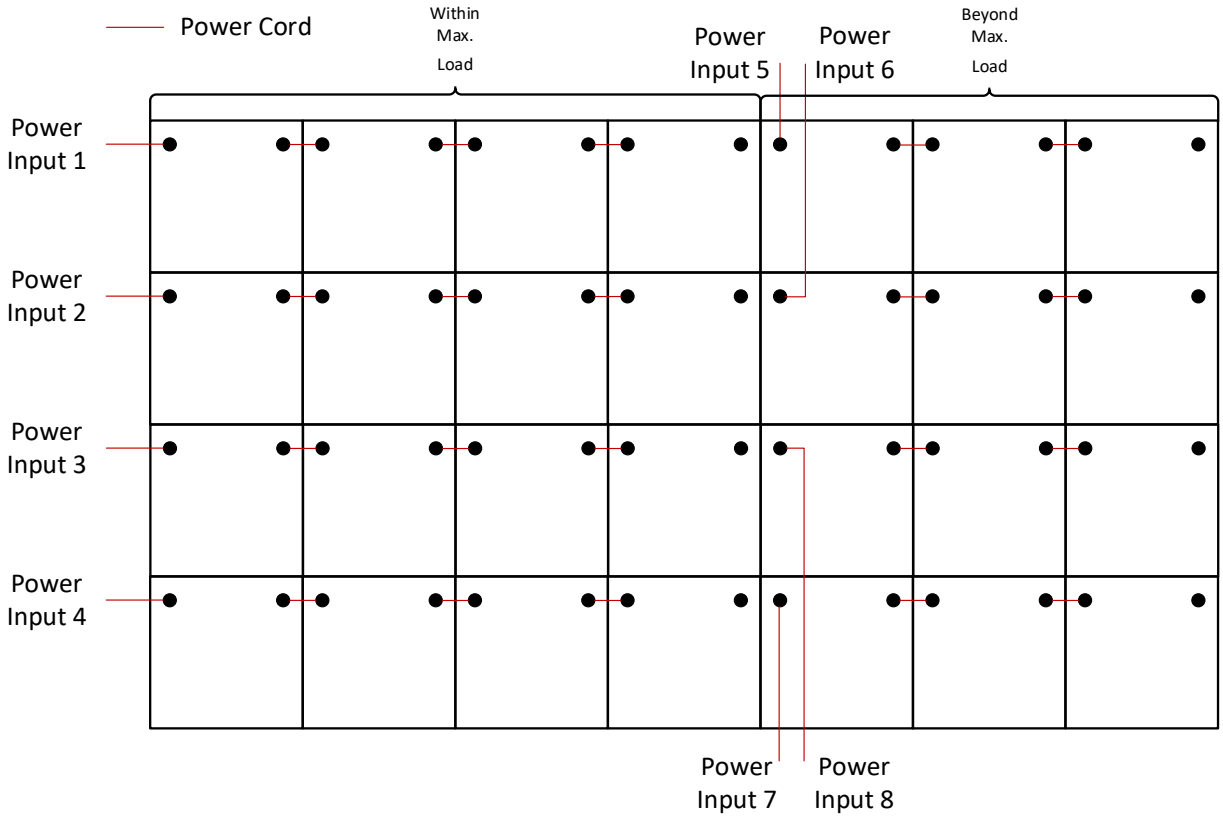

Figure 3-11 Power Cord Connection Diagram (Beyond Max. Load)

Step 5 Lock the two buckles on the wire hidden box to lock it for each cabinet.

3.3.2 Connect Network Cable

Each cabinet is equipped with a network input cable and a network output cable internally. The internal network cables can be connected in cascade in each row, and the external network cables for sending card connections are needed according to the load capacity of the network interfaces of the sending card.

Step 1 Unlock the two buckles on the wire hidden box to open it for each cabinet.

Step 2 Connect the network interface of the first cabinet in each row to the network interface of the sending card through the wiring holes.

Step 3 Connect the internal network cables within the max load. Connect the network interface of one cabinet to the network interface of the adjacent cabinet horizontally through the wiring holes in each row.

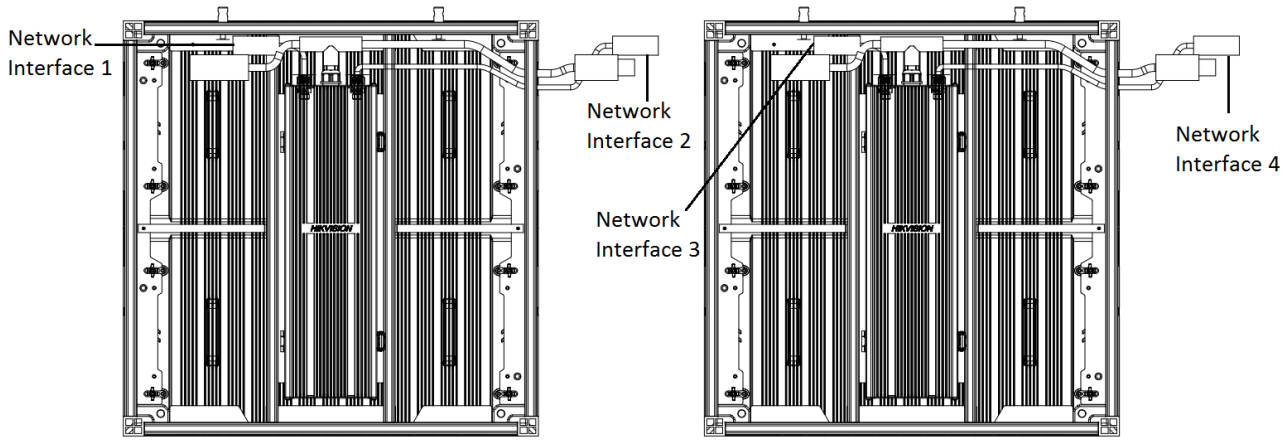

Figure 3-12 Connect Network Cable

Step 4 (Optional) If the actual number of cabinets exceeds the max load of the network interface, connect the network interface of the overloaded cabinet in each row to another network interface of the sending card via an external network cable through the wiring holes.

The figures below take 4 × 4 cabinets (within the max. load of the network cable) and 4 × 7 cabinets (4 × 4 within the max. load and 4 × 3 beyond the max. load of the power cord) for example.

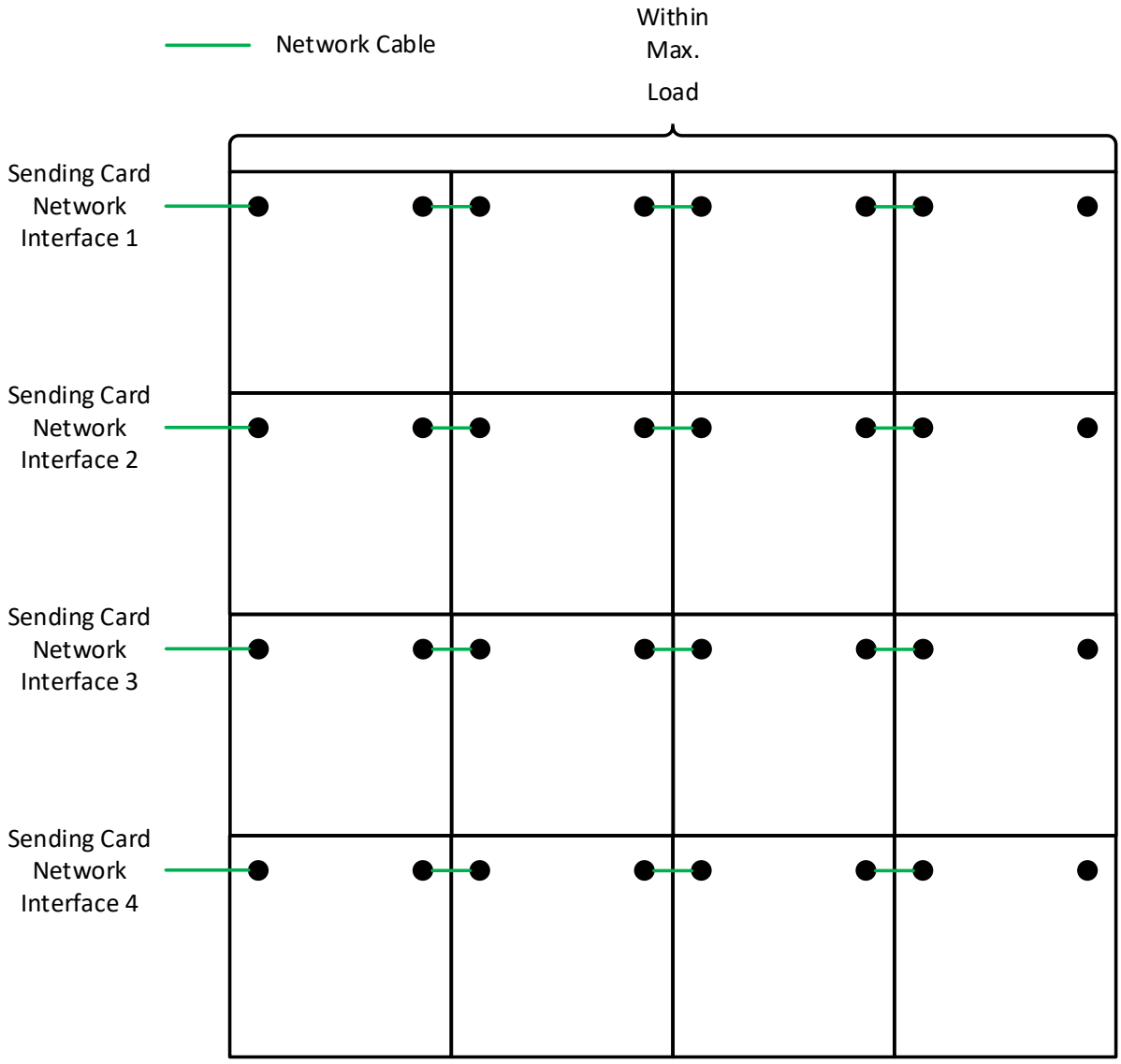

Figure 3-13 Network Cable Connection (Within Max. Load)

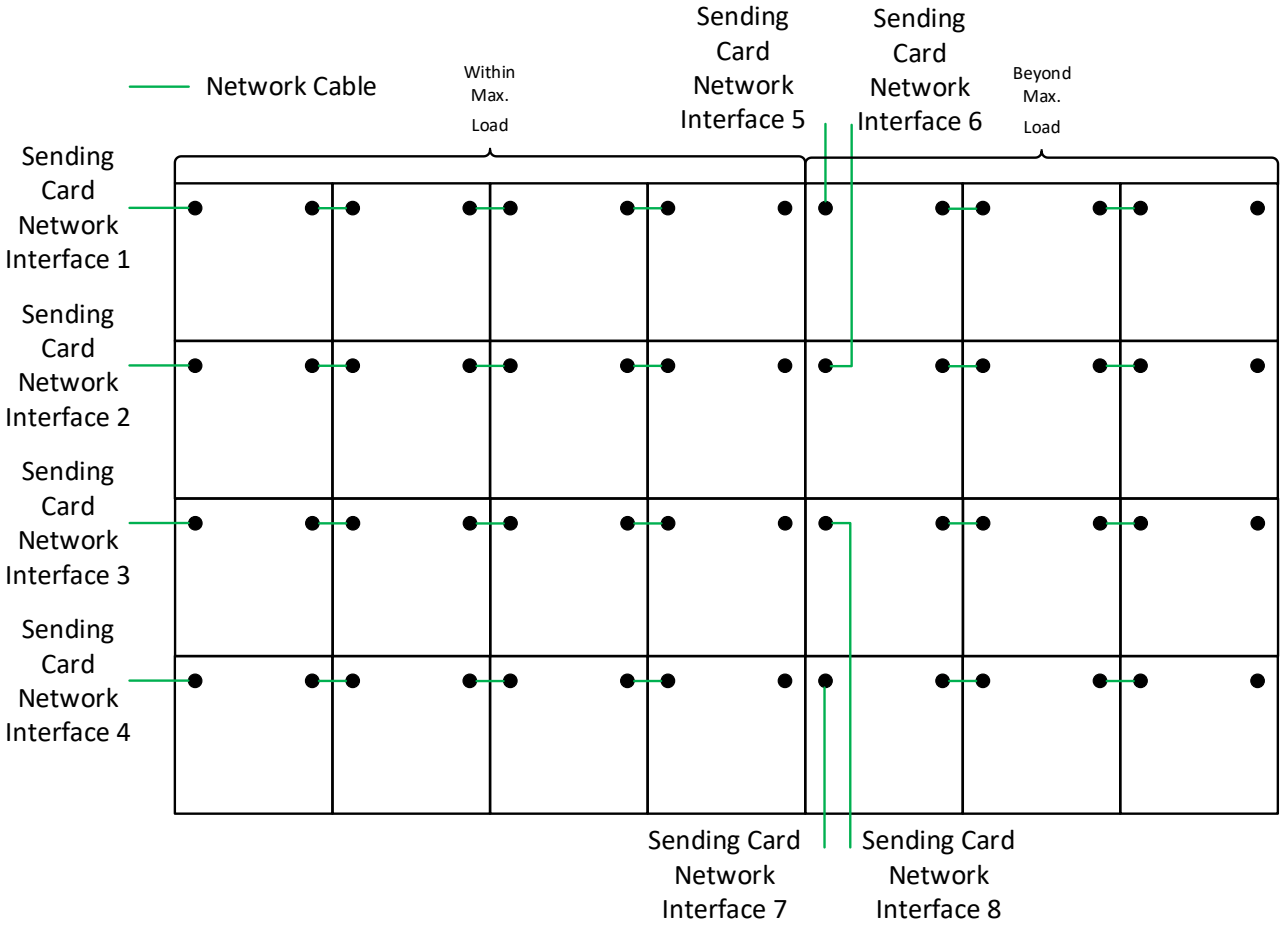

Figure 3-14 Network Cable Connection (Beyond Max. Load)

Step 5 Lock the two buckles on the wire hidden box to lock it for each cabinet.

Note

The figures shown above are for reference. The actual connection can be flexibly adjusted according to your needs, so long as every single network interface is not overloaded.

3.4 Maintenance

3.4.1 Maintain Lamp Board

You can maintain the lamp boards from the front or rear side.

Front Maintenance

Step 1 Insert a hex wrench to the reserved hole on the front of the lamp board, and rotate it 90° to the horizontal direction to unlock the locker on the rear of the lamp board.

Figure 3-15

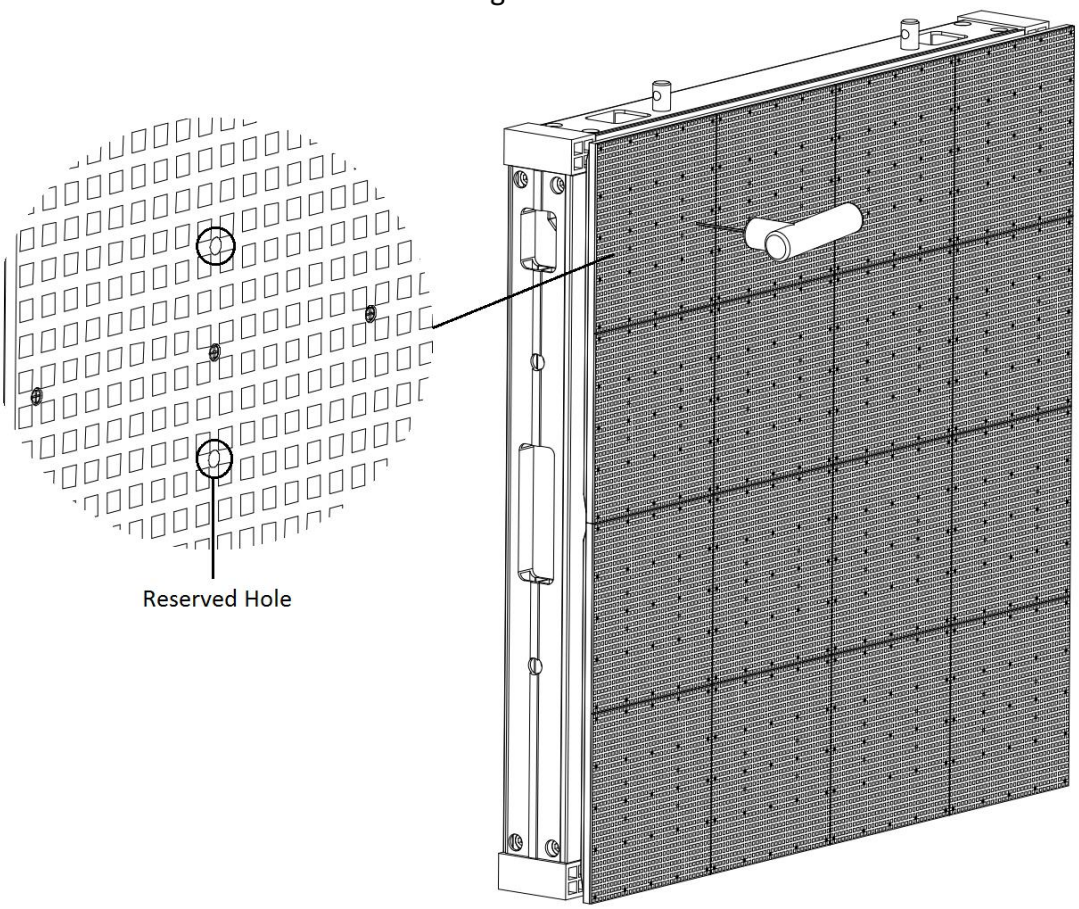

Figure 3-16 Disassemble Lamp Board with Hex Wrench

Step 2 Unlock the other three lockers for each lamp board.

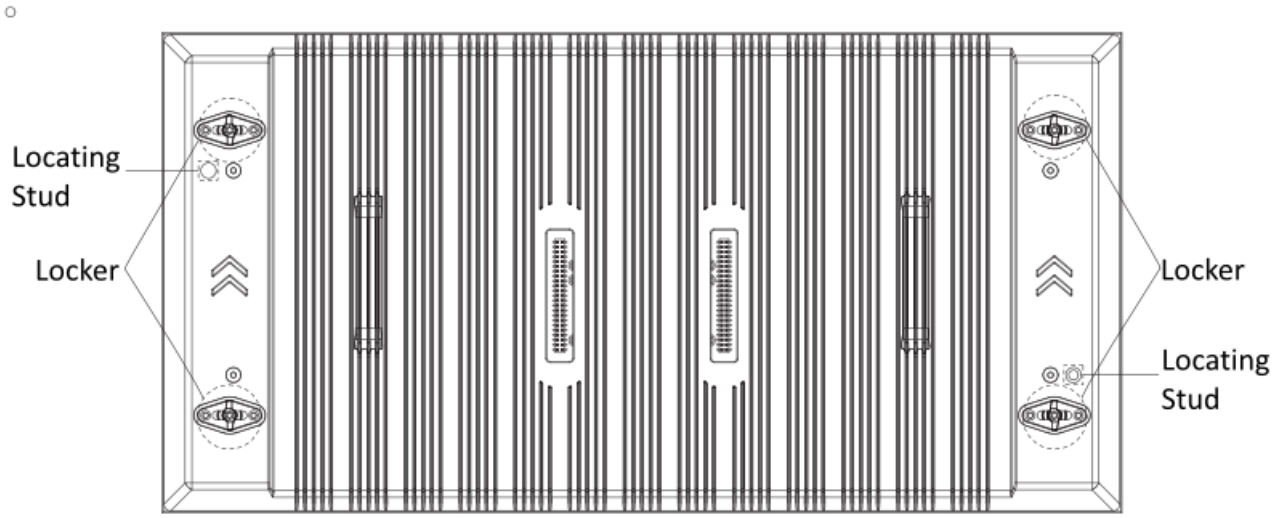

Figure 3-17 Lamp Board Rear View

Step 3 Pull out the lamp board with force.

Step 4 Repeat the steps above to disassemble other lamp boards.

Step 5 After the maintenance, assemble the lamp boards back.

1) Rotate the four lockers on the rear of the lamp board to the horizontal direction.
2) According to the arrow direction on the rear of the lamp board, align the lockers and locating studs on the rear of the lamp board to the reserved spaces on the cabinet frame, and install the lamp board slowly.
3) Insert a hex wrench to the reserved holes on the front of the lamp board, and rotate it 90° to the vertical direction to lock the lockers.
4) Repeat the steps above to assemble other lamp boards.

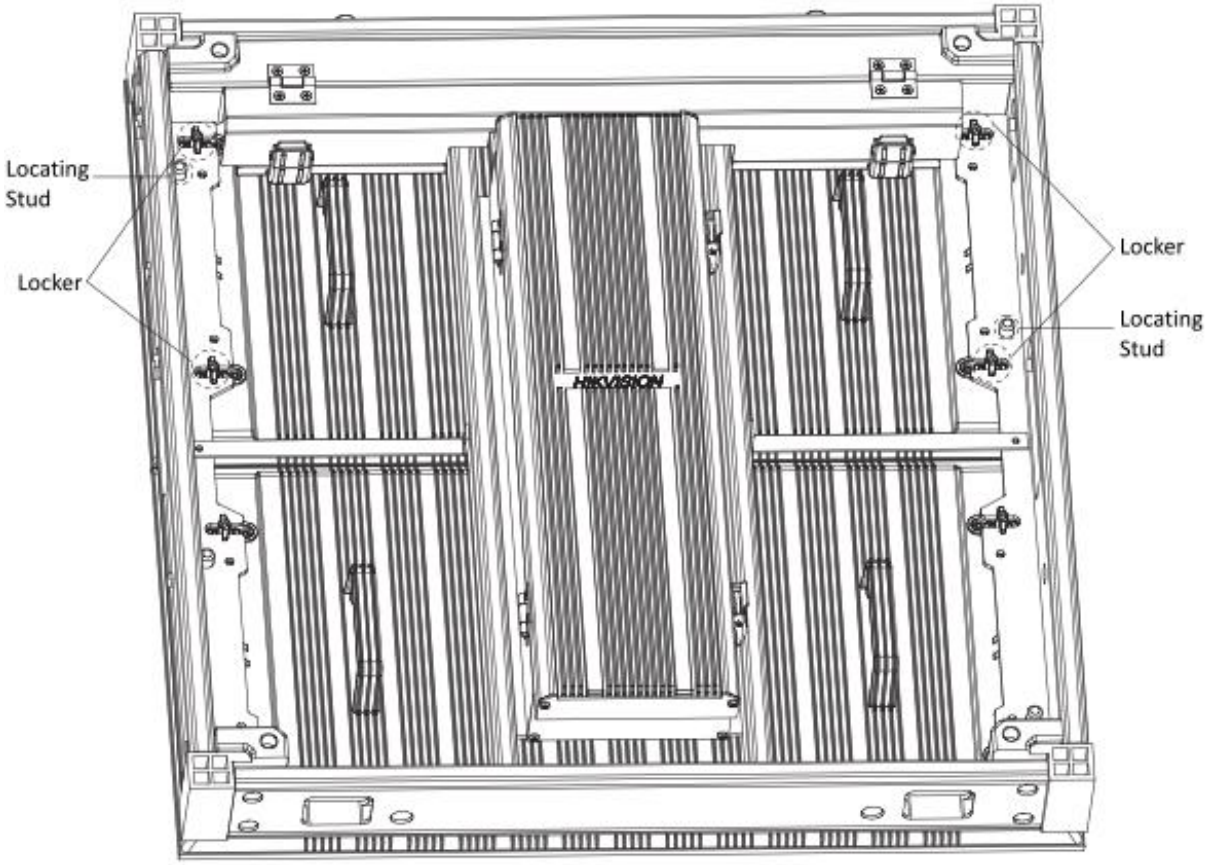

Figure 3-18 Assemble Lamp Board Back

Rear Maintenance

Note

For the upper-level lamp boards maintenance, follow the steps to disassemble the lower-level lamp boards first, and then disassemble the upper-level lamp boards and detach them from the lower-level cabinet frames to maintain. After the maintenance, follow the steps to assemble the upper-level lamp boards first, and then assemble the lower-level lamp boards.

Step 1 Rotate the four lockers of the lamp board on the rear of the cabinet 90° to the horizontal direction to unlock them.

Step 2 Hold the handles on the rear of the lamp board and push it out.

Step 3 Turn the lamp board until its short side can go through the frame diagonally.

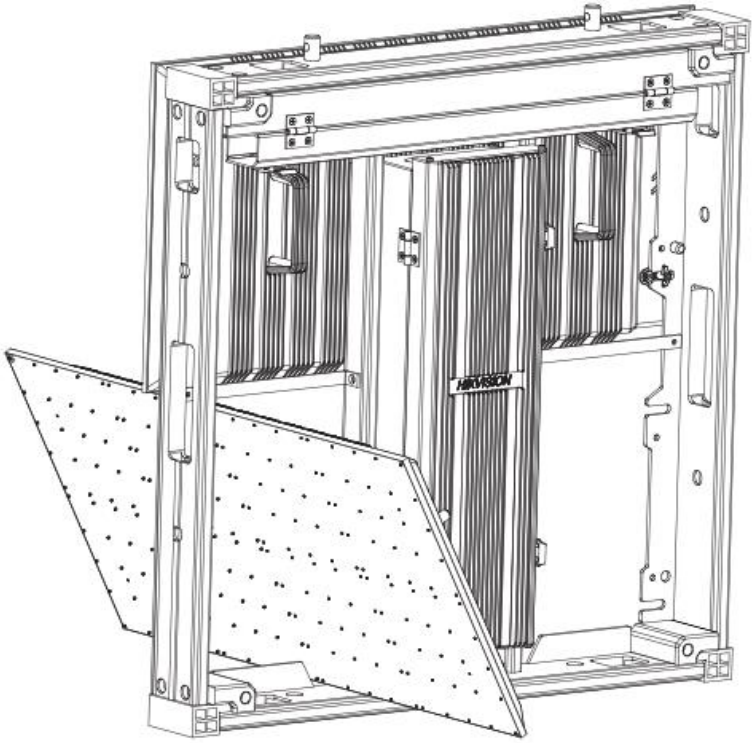

Figure 3-19 Remove Lamp Board

Step 4 After the lamp board is detached from the frame, unfasten the safety buckle and remove the lamp board.

Step 5 After the maintenance, assemble the lamp boards back.

1) Rotate the four lockers on the rear of the lamp board to the horizontal direction.
2) Fasten the safety buckle, put the short side of the lamp board diagonally through the frame, and turn the board until the arrow sign points up.
3) Hold the handles, and align the lockers and locating studs on the rear of the lamp board to the reserved spaces on the frame, and install the lamp board slowly.
4) Rotate the four lockers on the rear of the lamp board to the vertical direction to lock them.
5) Repeat the steps above to assemble other lamp boards.

Note

When you are putting the lamp boards back, check on the front to see whether the boards are in place.

3.4.2 Maintain Power Supply Box

Front Maintenance

Step 1 Disassemble the lamp boards. Refer to 3.4.1 Maintain Lamp Board.

Step 2 Unfasten the four screws on the power supply box to disassemble it.

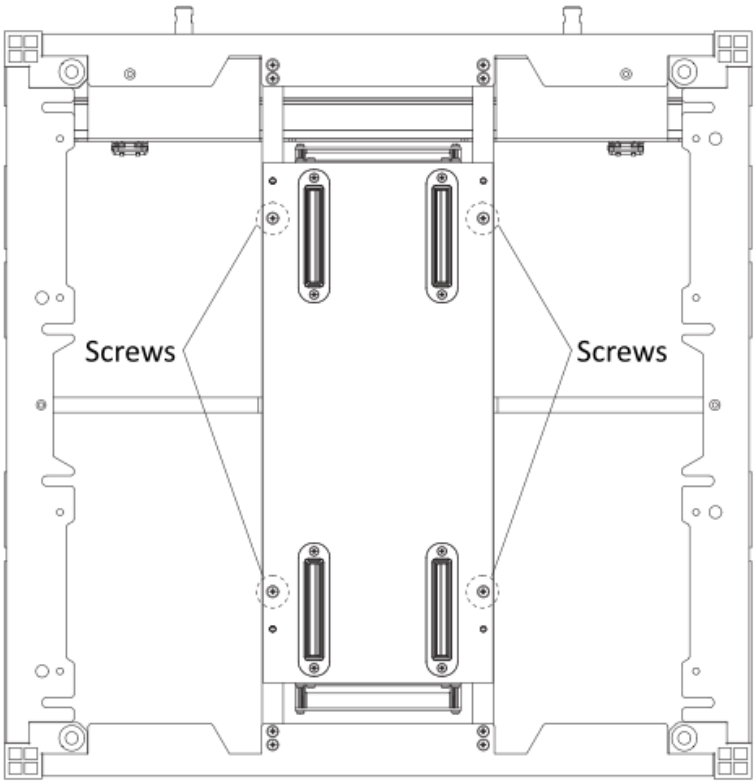

Figure 3-20 Disassemble Power Supply Box

Step 3 Unlock the two buckles on the power supply box to maintain the internal components.

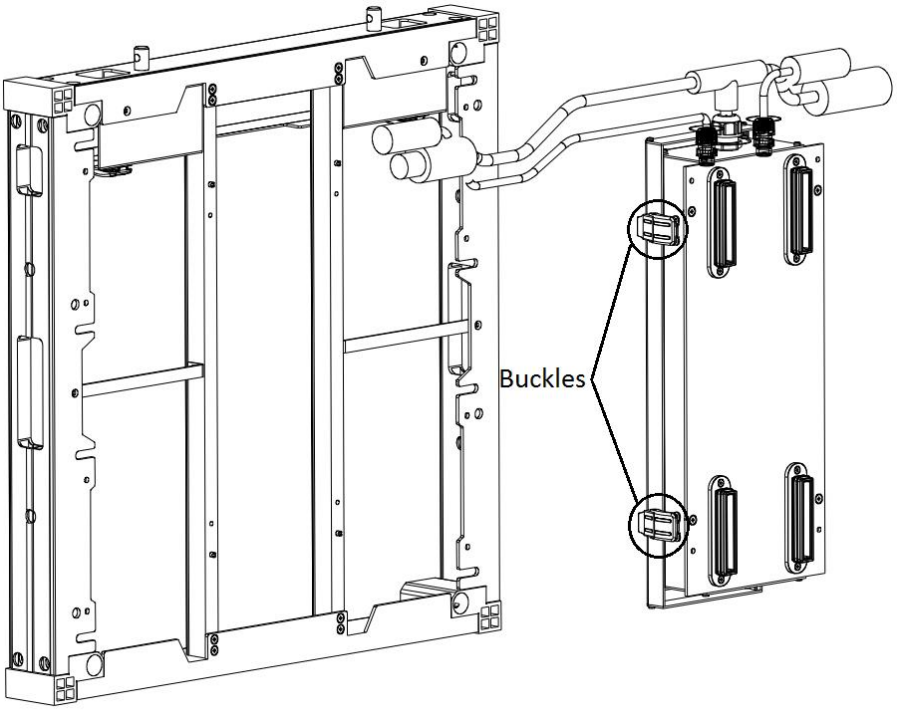

Figure 3-21 Maintain Power Supply Box

Step 4 After the maintenance, lock the two buckles on the power supply box, and fasten the four screws to fix the power supply box, and assemble the lamp boards back.

Rear Maintenance

Step 1 Unlock the two buckles on the power supply box to maintain the internal components.

Step 2 After the maintenance, lock the two buckles.

Chapter 4 Software Debugging

The device supports configuration via NovaLCT client. Download the client from https://www.novastar.tech/downloads. For detailed configuration, refer to the online help of the client.

Appendix A FAQ

Trouble	Solution
The screen cannot light on.	● Check whether the display is powered on and the power light is on or not. ● Check whether the green light of the sending card is on or not. ● Check whether the signal light of the receiving card flickers normally.
The image is blurred.	● Check whether the DVI is plugged in. ● Check whether the network cables are short circuit or broken. ● Check whether the screen refresh rate is 60 Hz. ● Check whether the cable transmission distance is too long.
A piece of the screen is black.	● Check whether there is just one receiving card in the black spot, the voltage of the receiving card is 5 V, and the cables work normally. ● Check whether the cables are loose.
Video files cannot be played.	● Check whether the Media Player is installed on computer. ● Check whether the file format is supported by the Media Player.

See Far, Go Further

UD30151B-C