DS-KIS212(B) Video Intercom Four-Wire Bundle

Quick Start Guide

UD42915B

Quick Start Flow Chart

1 Wiring
You can check the wiring of indoor station and door station and the wiring of lock

2 Installation
2.1 Installation of Door Station
2.2 Installation of Indoor Station

3 Local Operation
Local operation of devices

4 Cables
You can check cable specifications

Appearance

Appearance of Door Station

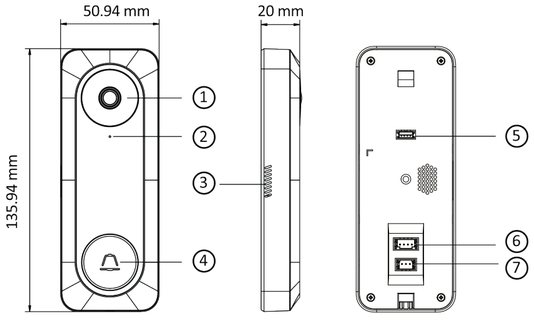

① Camera ② Microphone ③ Loudspeaker ④ Call Button
⑤ Debugging Port (For debugging use only) ⑥ Four-Wire Interface
⑦ Lock Interface

Appearance of Indoor Station

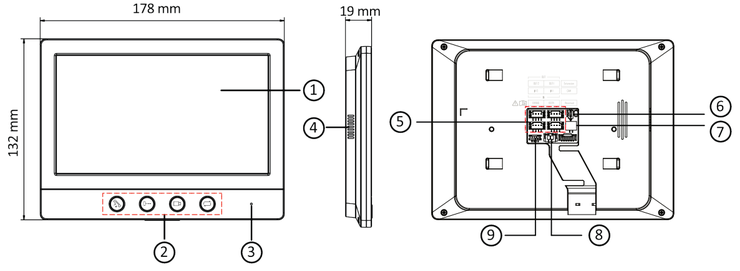

① Display Screen ② Buttons (Call/Unlock/Live View/Switch Camera) ③ Microphone ④ Loudspeaker
⑤ Four-Wire Interface ⑥ DIP Switch* ⑦ Camera Interface ⑧ Power Interface ⑨ Debugging Port (For debugging use only)*

- The pictures here are for reference only.
- The debugging port is for debugging use only.
- You can set the indoor station as main indoor station or indoor extension by setting the DIP Switch. Set the DIP switch to ***ON***, the device will be set as indoor extension. Set the DIP switch to ***1***, the device will be set as main indoor station. By default, the switch is set as ***1***.

1 Wiring

- For more details about the wiring, please refer to the ***User Manual***.
- Up to 2 door stations and 3 indoor stations can be used in one video intercom system.
- Only 1 indoor station can be set as the main indoor station. If there are more than 1 indoor station in the system, the other 1 or 2 indoor stations will be set as extensions.
- Interface ***A*** and ***C*** are for channel 2 and ***B*** and ***D*** for channel 1.

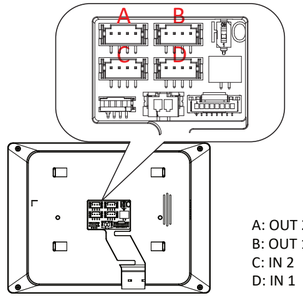

A: OUT 2
B: OUT 1
C: IN 2
D: IN 1

The analog camera supports PAL video standard.

1 Door Station and 1 Indoor Station

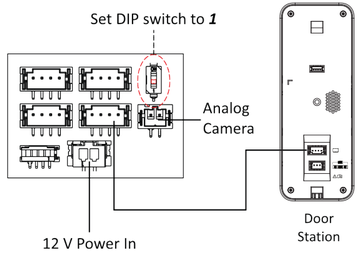

2 Door Stations and 3 Indoor Stations in One System

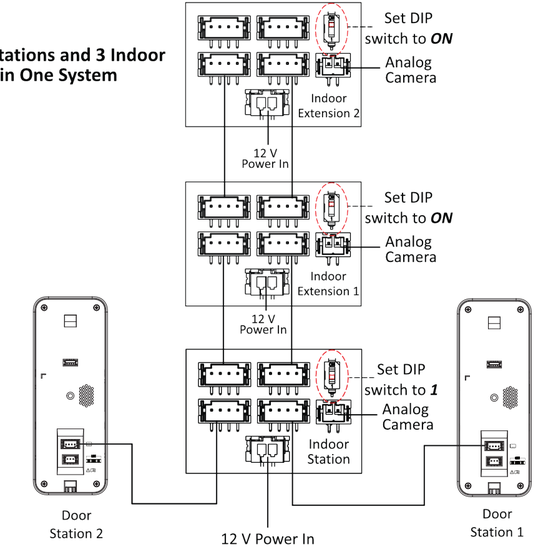

Wiring of Lock

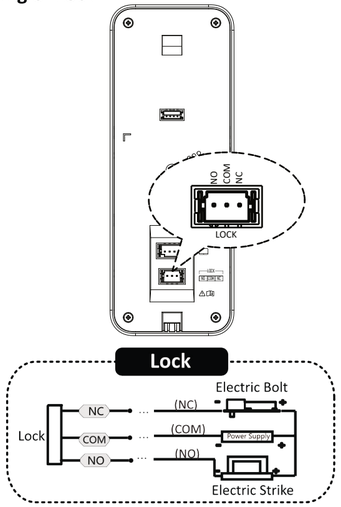

About this Document

● This Document includes instructions for using and managing the Product. Pictures, charts, images and all other information hereinafter are for description and explanation only.
● The information contained in the Document is subject to change, without notice, due to firmware updates or other reasons. Please find the latest version of the Document at the Hikvision website (***https://www.hikvision.com***). Unless otherwise agreed, Hangzhou Hikvision Digital Technology Co., Ltd. or its affiliates (hereinafter referred to as "Hikvision") makes no warranties, express or implied.
● Please use the Document with the guidance and assistance of professionals trained in supporting the Product.

About this Product

This product can only enjoy the after-sales service support in the country or region where the purchase is made.

Acknowledgment of Intellectual Property Rights

● Hikvision owns the copyrights and/or patents related to the technology embodied in the Products described in this Document, which may include licenses obtained from third parties.
● Any part of the Document, including text, pictures, graphics, etc., belongs to Hikvision. No part of this Document may be excerpted, copied, translated, or modified in whole or in part by any means without written permission.
● ***HIKVISION*** and other Hikvision's trademarks and logos are the properties of Hikvision in various jurisdictions.
● Other trademarks and logos mentioned are the properties of their respective owners.

LEGAL DISCLAIMER

● TO THE MAXIMUM EXTENT PERMITTED BY APPLICABLE LAW, THIS DOCUMENT AND THE PRODUCT DESCRIBED, WITH ITS HARDWARE, SOFTWARE AND FIRMWARE, ARE PROVIDED "AS IS" AND "WITH ALL FAULTS AND ERRORS". HIKVISION MAKES NO WARRANTIES, EXPRESS OR IMPLIED, INCLUDING WITHOUT LIMITATION, MERCHANTABILITY, SATISFACTORY QUALITY, OR FITNESS FOR A PARTICULAR PURPOSE. THE USE OF THE PRODUCT BY YOU IS AT YOUR OWN RISK. IN NO EVENT WILL HIKVISION BE LIABLE TO YOU FOR ANY SPECIAL, CONSEQUENTIAL, INCIDENTAL, OR INDIRECT DAMAGES, INCLUDING, AMONG OTHERS, DAMAGES FOR LOSS OF BUSINESS PROFITS, BUSINESS INTERRUPTION, OR LOSS OF DATA, CORRUPTION OF SYSTEMS, OR LOSS OF DOCUMENTATION, WHETHER BASED ON BREACH OF CONTRACT, TORT (INCLUDING NEGLIGENCE), PRODUCT LIABILITY, OR OTHERWISE, IN CONNECTION WITH THE USE OF THE PRODUCT, EVEN IF HIKVISION HAS BEEN ADVISED OF THE POSSIBILITY OF SUCH DAMAGES OR LOSS.
● YOU ACKNOWLEDGE THAT THE NATURE OF THE INTERNET PROVIDES FOR INHERENT SECURITY RISKS, AND HIKVISION SHALL NOT TAKE ANY RESPONSIBILITIES FOR ABNORMAL OPERATION, PRIVACY LEAKAGE OR OTHER DAMAGES RESULTING FROM CYBER-ATTACK, HACKER ATTACK, VIRUS INFECTION, OR OTHER INTERNET SECURITY RISKS; HOWEVER, HIKVISION WILL PROVIDE TIMELY TECHNICAL SUPPORT IF REQUIRED.
● YOU AGREE TO USE THIS PRODUCT IN COMPLIANCE WITH ALL APPLICABLE LAWS, AND YOU ARE SOLELY RESPONSIBLE FOR ENSURING THAT YOUR USE CONFORMS TO THE APPLICABLE LAW. ESPECIALLY, YOU ARE RESPONSIBLE, FOR USING THIS PRODUCT IN A MANNER THAT DOES NOT INFRINGE ON THE RIGHTS OF THIRD PARTIES, INCLUDING WITHOUT LIMITATION, RIGHTS OF PUBLICITY, INTELLECTUAL PROPERTY RIGHTS, OR DATA PROTECTION AND OTHER PRIVACY RIGHTS. YOU SHALL NOT USE THIS PRODUCT FOR ANY PROHIBITED END-USES, INCLUDING THE DEVELOPMENT OR PRODUCTION OF WEAPONS OF MASS DESTRUCTION, THE DEVELOPMENT OR PRODUCTION OF CHEMICAL OR BIOLOGICAL WEAPONS, ANY ACTIVITIES IN THE CONTEXT RELATED TO ANY NUCLEAR EXPLOSIVE OR UNSAFE NUCLEAR FUEL-CYCLE, OR IN SUPPORT OF HUMAN RIGHTS ABUSES.
● IN THE EVENT OF ANY CONFLICTS BETWEEN THIS DOCUMENT AND THE APPLICABLE LAW, THE LATTER PREVAILS.

© Hangzhou Hikvision Digital Technology Co., Ltd. All rights reserved.

2 Installation

Installation of Door Station

Wall Mounting

Installation Accessory Description

The mounting plate is required to install the door station onto the wall.
The dimension of the mounting plate is shown.

Before You Start

Make sure the device in the package is in good condition and all the assembly parts are included.
Make sure all related equipments are powered-off during the installation.
Check the product specification for the installation environment.

Mounting Plate

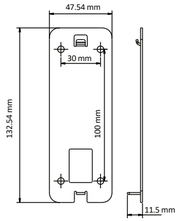

Mounting Template

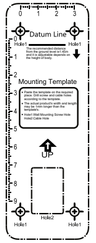

Protective Shied

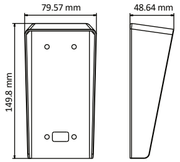

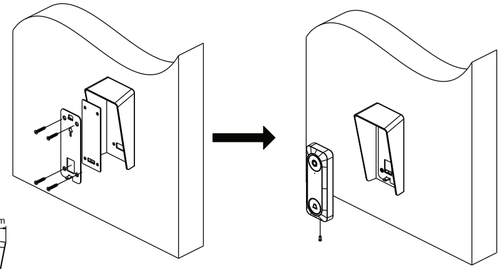

1. Stick the mounting template on the wall. Drill screw holes according to the mounting template. Remove the template from the wall.
2. Secure the mounting plate, the silicone and the protective shield on the wall with 4 SC-KA4X25 screws according to the screw holes.
3. Wire the device and fix the device to the mounting plate.
4. Fix the device on the mounting plate with 1 SC-KM3X8-T10-SUS-NL set screw.

Wall Mounting with Junction Box

Devices support wall mounting.

Installation Accessory Description

The wall mounting plate and junction box are required to install the indoor station onto the wall. The dimension of the mounting plate is shown as below.

The mounting plate is supplied. The junction box is not supplied.

Before You Start

Make sure the device in the package is in good condition and all the assembly parts are included.
The power supply the indoor station supported is DC 12 V. Please make sure your power supply matches your indoor station.
Make sure all related equipments are powered-off during the installation.
Check the product specification for the installation environment.

Mounting Plate

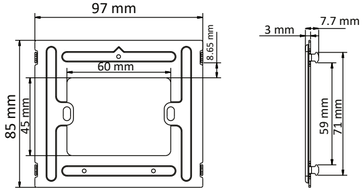

For more installation approaches of door station and indoor station, please refer to the ***User Manual***.

Installation of Indoor Station

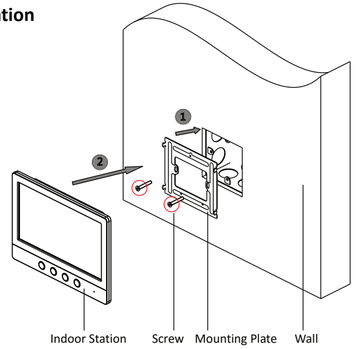

1. Chisel a hole in the wall. Insert the junction box to the hole.
2. Fix the wall mounting plate to the junction box with 2 SC-KM4X25 screws.
3. Hook the indoor station to the wall mounting plate tightly by inserting the plate hooks into slots on the rear panel of the indoor station, during which the lock catch will be locked automatically.

3 Local Operation

Before You Start

Connect the indoor station and door station via the four-wire interface, wire the indoor station with DC 12 V power adapter via the power interface. Power on the indoor station, and the door station will be powered on automatically.

Buttons on Indoor Station

Receive/Hang up the call

Unlock the door

View the live videos of door stations or analog camera

- Switching between door station 1 or 2 or network camera when viewing live videos
- Long press for 3 s to enter the page of configuration.

Call Indoor Station from Door Station

Press the call button on the door station to call indoor station.
The indoor station can receive the call by pressing the call button on the indoor station or hang up the call by long pressing the call button.

- The door station can cancel the call by pressing the call button only after placing the call for 5 seconds.
- After receiving the call, the indoor station can press the call button to hang up the call.

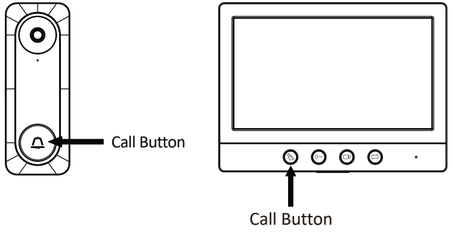

4 Cables

If you use two groups of parallel cables or twisted pairs instead of the supplied white four-wire cables for wiring, you should put the blue cable (video) and black cable (ground) in the same group of parallel cables or twisted pairs and put the yellow cable (audio) and red cable (power) in the same group.

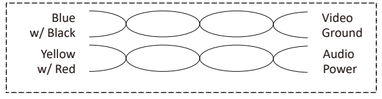

Routing Path	Cable Specification			
Door Station to Indoor Station	AWG24	AWG20	AWG18	AWG16
	Transmission Distance ≤ 10 m	10 m< Transmission Distance ≤ 30 m	30 m< Transmission Distance ≤ 50 m	50 m< Transmission Distance ≤ 100 m

For more details about the configuration of the bundle, please refer to the ***User Manual***.

If a power adapter is provided in the device package, use the provided adapter only. If no power adapter is provided, ensure the power adapter or other power supply complies with Limited Power Source. Refer to the product label for the power supply output parameters.

Если адаптер питания входит в комплект поставки устройства, используйте только прилагаемый адаптер. Если адаптер питания не входит в комплект поставки, убедитесь, что используемый вами адаптер питания или источник питания соответствует требованиям к ограничению мощности. Выходные параметры источника питания указаны на его паспортной табличке.

Amennyiben a készülék csomagja tartalmaz hálózati adaptert, kizárólag a mellékelt adaptert használja. Ha a csomag nem tartalmaz hálózati adaptert, bizonyosodjon meg, hogy a használt hálózati adapter vagy más tápegységek megfelelnek a korlátozott áramforrásokra vonatkozó előírásoknak. A tápegység teljesítményének paraméterei a termék címkéjén találhatók.

Wenn im Lieferumfang des Geräts ein Netzteil enthalten ist, verwenden Sie nur das mitgelieferte Netzteil. Wenn kein Netzteil mitgeliefert wird, stellen Sie sicher, dass das Netzteil oder eine andere Stromversorgung den Anforderungen an eine Stromquelle mit begrenzter Leistung entspricht. Die Ausgangsparameter des Netzteils sind auf dem Produktaufkleber angegeben.

Utilizzare solo l'alimentatore in dotazione, se incluso nella confezione del dispositivo. Se l'alimentatore non è incluso, accertarsi di utilizzare un modello conforme allo standard sulle fonti di alimentazione limitate. Consultare l'etichetta del prodotto per i parametri dell'uscita di alimentazione.

Pokud je v balení zařízení dodán napájecí adaptér, používejte pouze dodaný adaptér. Pokud není napájecí adaptér dodán, zajistěte, aby napájecí adaptér nebo jiný napájecí zdroj vyhovovaly požadavkům na omezený zdroj napájení. Parametry výstupu napájení viz štítek výrobku.

Ak bolo zariadenie dodané s napájacím adaptérom, použite iba dodaný adaptér. Ak napájací adaptér nie je dodaný, uistite sa, že napájací adaptér alebo iný zdroj napájania vyhovuje obmedzenému zdroju napájania. Parametre výstupu napájacieho zdroja nájdete na štítku produktu.

Si un adaptateur secteur est fourni dans l'emballage de l'appareil, n'utilisez que l'adaptateur fourni. Si aucun adaptateur secteur n'est fourni, assurez-vous que l'adaptateur secteur ou toute autre source d'alimentation est conforme à la source d'alimentation limitée. Reportez-vous à l'étiquette du produit pour connaître les paramètres de sortie de l'alimentation.

Jeżeli w pakiecie z urządzeniem dostarczany jest zasilacz, należy używać wyłącznie tego zasilacza. Jeżeli zasilacz nie jest dostarczany w pakiecie z urządzeniem, należy używać zasilacza zgodnego z wymaganiami dotyczącymi źródeł zasilania z własnym ograniczeniem (LPS, Limited Power Source). Informacje dotyczące wymaganego zasilania podano na etykiecie produktu.

Als een voedingsadapter in de verpakking van het apparaat is geleverd, mag u alleen deze adapter gebruiken. Als er geen voedingsadapter is meegeleverd, moet u ervoor zorgen dat de voedingsadapter of een andere stroombron voldoet aan de Beperkte voedingsbron. Raadpleeg het productlabel voor de parameters voor de stroomuitvoer.

Se a embalagem do dispositivo incluir um adaptador de alimentação, utilize apenas o adaptador fornecido. Se não for fornecido um adaptador, certifique-se de que o adaptador de alimentação ou qualquer outra fonte de alimentação está em conformidade com a Fonte de Alimentação Limitada. Consulte a etiqueta do produto para obter os parâmetros nominais da fonte de alimentação.

Si el paquete del dispositivo incluye un adaptador de corriente, utilice únicamente el adaptador suministrado. Si no se suministra un adaptador de corriente, asegúrese de que el adaptador de corriente u otra fuente de alimentación que utilice cumple con el límite de la fuente de alimentación. Consulte la etiqueta del producto para conocer los parámetros de salida de la fuente de alimentación.

Dacă dispozitivul se furnizează cu un adaptor de alimentare, utilizați-l numai pe acesta. Dacă nu se furnizează niciun adaptor de alimentare, asigurați-vă că adaptorul sau o altă alimentare electrică este compatibilă cu sursa de alimentare limitată. Pentru parametrii de ieșire ai alimentării electrice, consultați eticheta produsului.

Hvis en strømadapter følger med i enhedens pakke, må du kun bruge den medfølgende adapter. Hvis der ikke medfølger en strømadapter, skal du sikre, at strømadapteren eller en anden strømforsyning overholder LPS (Limited Power Source). Find strømforsyningens udgangsparametre i produktets mærkat.

Cihaz paketinde bir güç adaptörü varsa, sadece verilen adaptörü kullanın. Güç adaptörü verilmediyse, güç adaptörünün veya diğer güç kaynağının Sınırlı Güç Kaynağı ile uyumlu olduğundan emin olun. Güç kaynağı çıkış parametreleri için ürün etiketine bakın.

في حال توفر محول طاقة في عبوة الجهاز، استخدم المحول المرفق فقط. في حال عدم توفر محول طاقة، تأكد من توافق محول الطاقة أو مصدر الطاقة الآخر مع مصدر الطاقة المحدود. راجع ملصق المنتج للاطلاع على معلمات خرج مصدر الطاقة.

Якщо блок живлення входить у комплект поставки, використовуйте тільки наданий блок живлення. Якщо блок живлення не входить у комплект поставки, переконайтеся, що блок живлення або інше джерело живлення відповідає вимогам до джерел живлення обмеженої потужності. Вимоги до вихідних параметрів джерела живлення див. на етикетці виробу.

Jika adaptor daya disediakan dalam kemasan perangkat, hanya gunakan adaptor yang disediakan. Jika adaptor daya tidak disediakan, pastikan adaptor daya atau catu daya lain sesuai dengan Sumber Daya Terbatas. Lihat label produk untuk parameter output catu daya.

ကိရိယာ ထုပ်ပိုးမှုတွင် ပါဝါ အဒက်ပတာ ထည့်သွင်းပါရှိပါက၊ ပေးထားဒေသာ အဒက်ပတာကိုသာ အသုံးပြုပါ။ ပါဝါ အဒက်ပတာ ပါရှိခြင်းမရှိပါက၊ ပါဝါဓင်းမြှင် ကန့်သတ်မှုနှင့် ကိုက်ညီဝေသာ ပါဝါ အဒက်ပတာ သို့မဟုတ် အခြား ပါဝါ ပေးသွင်းမှုများကို သုံးရန် ဂရုပြုပါ။ ပါဝါပေးသွင်းမှု အထွက် ကန့်သတ်ချက်များအတွက် ထုတ်ကုန်တွင် ရေးသားထားချက်ကို ကိုးကားပါ။