HIKVISION

Monitor

User Manual

Legal Information

About this Document

- This Document includes instructions for using and managing the Product. Pictures, charts, images and all other information hereinafter are for description and explanation only.
- The information contained in the Document is subject to change, without notice, due to firmware updates or other reasons. Please find the latest version of the Document at the Hikvision website (***https://www.hikvision.com***). Unless otherwise agreed, Hangzhou Hikvision Digital Technology Co., Ltd. or its affiliates (hereinafter referred to as "Hikvision") makes no warranties, express or implied.
- Please use the Document with the guidance and assistance of professionals trained in supporting the Product.

About this Product

This product can only enjoy the after-sales service support in the country or region where the purchase is made.

Acknowledgment of Intellectual Property Rights

- Hikvision owns the copyrights and/or patents related to the technology embodied in the Products described in this Document, which may include licenses obtained from third parties.
- Any part of the Document, including text, pictures, graphics, etc., belongs to Hikvision. No part of this Document may be excerpted, copied, translated, or modified in whole or in part by any means without written permission.
- HIKVISION and other Hikvision's trademarks and logos are the properties of Hikvision in various jurisdictions.
- Other trademarks and logos mentioned are the properties of their respective owners.
- HDMI The terms HDMI and HDMI High-Definition Multimedia Interface, and the HDMI Logo are trademarks or registered trademarks of HDMI Licensing Administrator, Inc. in the United States and other countries.

LEGAL DISCLAIMER

- TO THE MAXIMUM EXTENT PERMITTED BY APPLICABLE LAW, THIS DOCUMENT AND THE PRODUCT DESCRIBED, WITH ITS HARDWARE, SOFTWARE AND FIRMWARE, ARE PROVIDED "AS IS" AND "WITH ALL FAULTS AND ERRORS". HIKVISION MAKES NO WARRANTIES, EXPRESS OR IMPLIED, INCLUDING WITHOUT LIMITATION, MERCHANTABILITY, SATISFACTORY QUALITY, OR FITNESS FOR A PARTICULAR PURPOSE. THE USE OF THE PRODUCT BY YOU IS AT YOUR OWN RISK. IN NO EVENT WILL HIKVISION BE LIABLE TO YOU FOR ANY SPECIAL, CONSEQUENTIAL, INCIDENTAL, OR INDIRECT DAMAGES, INCLUDING, AMONG OTHERS, DAMAGES FOR LOSS OF

BUSINESS PROFITS, BUSINESS INTERRUPTION, OR LOSS OF DATA, CORRUPTION OF SYSTEMS, OR LOSS OF DOCUMENTATION, WHETHER BASED ON BREACH OF CONTRACT, TORT (INCLUDING NEGLIGENCE), PRODUCT LIABILITY, OR OTHERWISE, IN CONNECTION WITH THE USE OF THE PRODUCT, EVEN IF HIKVISION HAS BEEN ADVISED OF THE POSSIBILITY OF SUCH DAMAGES OR LOSS.

- YOU ACKNOWLEDGE THAT THE NATURE OF THE INTERNET PROVIDES FOR INHERENT SECURITY RISKS, AND HIKVISION SHALL NOT TAKE ANY RESPONSIBILITIES FOR ABNORMAL OPERATION, PRIVACY LEAKAGE OR OTHER DAMAGES RESULTING FROM CYBER-ATTACK, HACKER ATTACK, VIRUS INFECTION, OR OTHER INTERNET SECURITY RISKS; HOWEVER, HIKVISION WILL PROVIDE TIMELY TECHNICAL SUPPORT IF REQUIRED.
- YOU AGREE TO USE THIS PRODUCT IN COMPLIANCE WITH ALL APPLICABLE LAWS, AND YOU ARE SOLELY RESPONSIBLE FOR ENSURING THAT YOUR USE CONFORMS TO THE APPLICABLE LAW. ESPECIALLY, YOU ARE RESPONSIBLE, FOR USING THIS PRODUCT IN A MANNER THAT DOES NOT INFRINGE ON THE RIGHTS OF THIRD PARTIES, INCLUDING WITHOUT LIMITATION, RIGHTS OF PUBLICITY, INTELLECTUAL PROPERTY RIGHTS, OR DATA PROTECTION AND OTHER PRIVACY RIGHTS. YOU SHALL NOT USE THIS PRODUCT FOR ANY PROHIBITED END-USES, INCLUDING THE DEVELOPMENT OR PRODUCTION OF WEAPONS OF MASS DESTRUCTION, THE DEVELOPMENT OR PRODUCTION OF CHEMICAL OR BIOLOGICAL WEAPONS, ANY ACTIVITIES IN THE CONTEXT RELATED TO ANY NUCLEAR EXPLOSIVE OR UNSAFE NUCLEAR FUEL-CYCLE, OR IN SUPPORT OF HUMAN RIGHTS ABUSES.
- IN THE EVENT OF ANY CONFLICTS BETWEEN THIS DOCUMENT AND THE APPLICABLE LAW, THE LATTER PREVAILS.

© Hangzhou Hikvision Digital Technology Co., Ltd. All rights reserved.

Applicable Models

This manual is applicable to the model: Monitor.

Symbol Conventions

The symbols that may be found in this document are defined as follows.

Symbol	Description
Note	Provides additional information to emphasize or supplement important points of the main text.
Caution	Indicates a potentially hazardous situation, which if not avoided, could result in equipment damage, data loss, performance degradation, or unexpected results.
Danger	Indicates a hazard with a high level of risk, which if not avoided, will result in death or serious injury.

Safety Instructions

Danger

- Caution: The device may generate radio interference in indoor environment. Necessary precautions may be required.
- In the use of the product, you must be in strict compliance with the electrical safety regulations of the nation and region.
- Provide a surge suppressor at the inlet opening of the device under special conditions such as the mountain top, iron tower, and forest.
- Input voltage should meet both the SELV (Safety Extra Low Voltage) and the Limited Power Source with 100 to 240 VAC or 12 VDC/2A according to the IEC60950-1 standard.
- If the device uses a 3-prong power supply plug, it must be connected to an earthed mains socket-outlet properly.
- The socket-outlet shall be installed near the device and shall be easily accessible.
- Do not touch the bare components (such as the metal contacts of the inlets) and wait for at least 5 minutes, since electricity may still exist after the device is powered off.
- CAUTION: Replace the fuse only with the same model to reduce the risk of fire or electric shock.
- The device must be connected to an earthed mains socket-outlet.
- Make sure that the power has been disconnected before you wire, install, or disassemble the device.
- CAUTION: This device is for use only with specified bracket (Hikvision's monitor stand). Use with other (carts, stands, or carriers) may result in instability causing injury.

- If the device is equipped with personal music player function, to prevent possible hearing damage, do not listen at high volume levels for long periods. Refer to datasheet for details.
- The interface varies with the models. Please refer to the product datasheet for details.
- If the device needs to be wired by yourself, select the corresponding wire to supply power according to the electric parameters labeled on the device. Strip off wire with a standard wire stripper at corresponding position. To avoid serious consequences, the length of stripped wire shall be appropriate, and conductors shall not be exposed.
- If the device is not working properly, contact the store where the device was purchased or the nearest service center and do not remove or modify the device in any way. (Our company is not responsible for problems caused by unauthorized modifications or repairs.)

Caution

- The device shall not be exposed to water dripping or splashing and that no objects filled with liquids, such as vases, shall be placed on the equipment.
- Ensure correct voltage and wiring of the terminals for connection to mains supply.
- The device has been designed, when required, modified for connection to an IT power distribution system.
- identifies the battery holder itself and identifies the positioning of the cell(s) inside the battery holder.
- + identifies the positive terminal(s) of equipment which is used with, or generates direct current. - identifies the negative terminal(s) of device which is used with, or generates direct current.
- No naked flame sources, such as lighted candles, should be placed on the equipment.
- The ventilation should not be impeded by covering the ventilation openings with items, such as newspapers, tablecloths, curtains, etc. The openings shall never be blocked by placing the equipment on a bed, sofa, rug or other similar surface.
- Keep product surface clean and dry. Do not operate in humid or explosive environment.
- Avoid contact with exposed circuits. Do not touch exposed contacts or components when powering on the product.
- The USB port of the device is used for connecting to a mouse, a keyboard, or a USB flash drive only.
- Install the device according to the instructions in this manual.
- To prevent injury, this device must be securely attached to the floor/wall in accordance with the installation instructions.
- To prevent injury, this device must be securely attached to the installation surface in accordance with the installation instructions.
- Never place the device in an unstable location. The device may fall, causing serious personal injury or death.
- The additional force shall be equal to three times the weight of the device but not less than 50 N. The device and its associated mounting means shall remain secure during the installation.

- After the installation, the device, including any associated mounting plate, shall not be damaged.
- Do not cause objects to fall on the device or shake the device vigorously, and keep the device away from areas where magnetic field interference exists. Avoid installing the device in a place where the surface vibrates or is vulnerable to shock.
- Do not install the device at high temperatures (above 40 °C) or low temperatures (below -10 °C) or high humidity.
- Keep vertical when moving or using the device.
- Proper configuration of all passwords and other security settings is the responsibility of the installer and/or end-user.
- If a power adapter is provided in the device package, use the provided adapter only. Power adapter models: ADS-26FSG-12 12024EPB, ADS-26FSG-12 12024EPG, ADS-26FSG-12 12024EPCU/EPC.

Chapter 1 Product Introduction

1.1 Buttons on the Front Panel

Buttons on the front panel of the device are shown as follows.

Figure 1-1 Buttons on the Front Panel

Tablet 1-1 Button Description

Button	Description
	Power Supply Indicator
	Turn On/Off
	• MENU and Signal Source page: Exit MENU and Signal Source page. • Other pages: Show MENU page.
	• Show the current signal source • Other pages: Confirm
	MENU secondary page: Add or Decrease the value
	• Show all signal sources on screen. • Other pages: Switch to the next page.

1.2 Interfaces on the Rear Panel

The interfaces that may be found on the rear panel of the device are defined as follows.

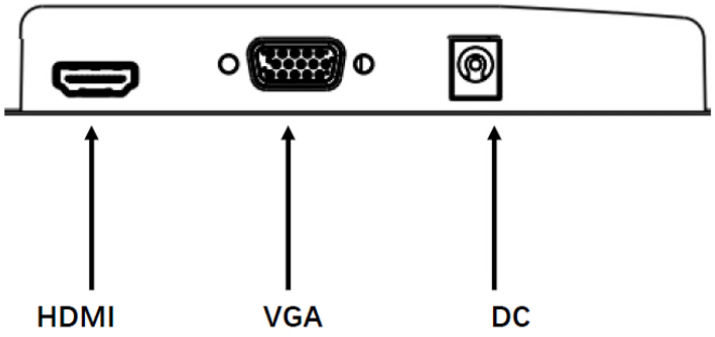

Figure 1-2 Rear Interface Type 1

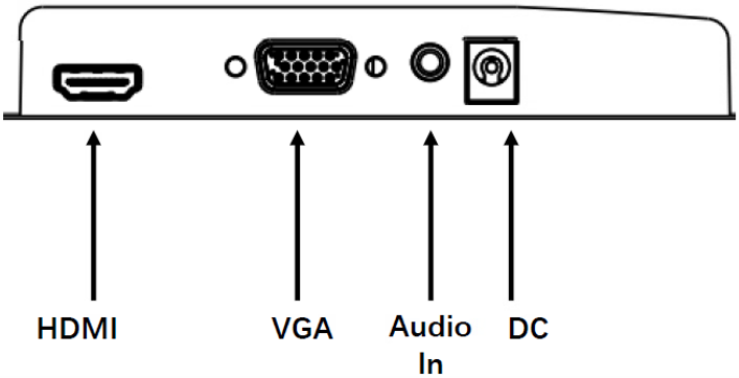

Figure 1-3 Rear Interface Type 2

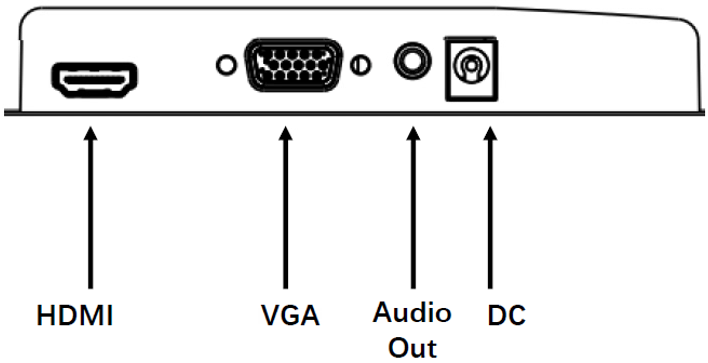

Figure 1-4 Rear Interface Type 3

Table 1-2 Interface Description

Interface	Description	Interface	Description
HDMI	HDMI digital signal input	VGA	VGA analog signal input
AUDIO In	3.5 mm Audio input interface	Audio Out	3.5 mm Audio output interface
DC	Power input interface		

Note

- The device supports power adapter to power on.
- The figures are for reference only. The actual device prevails.

Chapter 2 Installation and Power On

Note

The installation drawings are for reference only.

2.1 Install the Square Base

Step 1 Gently lift the device. Place the screen down on a stable surface covered with a thick soft cloth so that the bottom of the device is close to the edge of the surface for mounting the bracket.

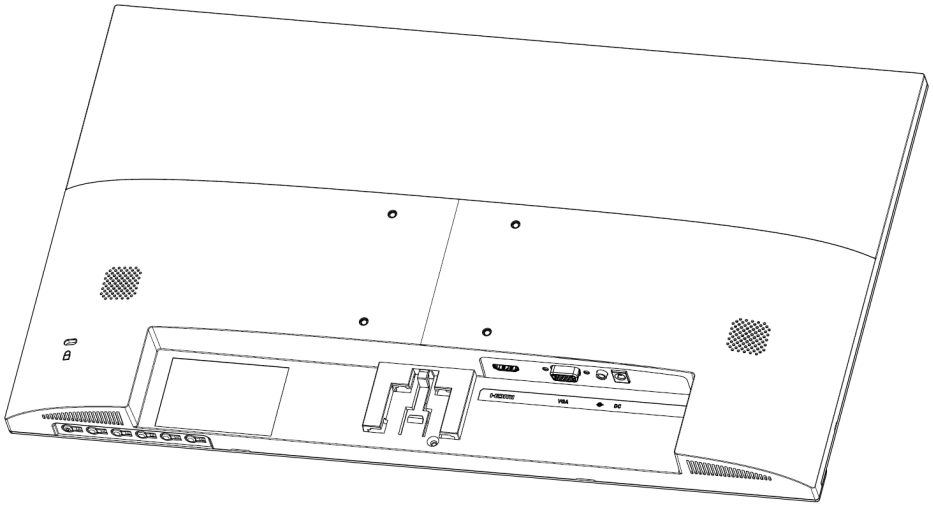

Figure 2-1 Place the Monitor

Step 2 Take out the bracket, cable ties, and square base from the packing box. Align the cable ties with the holes in the bracket and insert the cable ties into the bracket. Then align the bracket with the buckle on the base and fix the bracket clockwise.

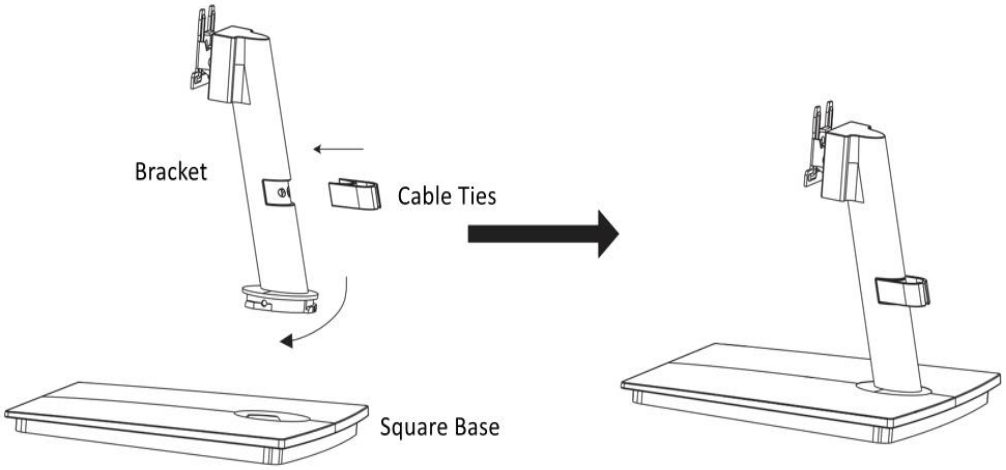

Figure 2-2 Fix the Bracket with the Square Base

Step 3 Align the metal parts on the bracket of square base with the slots at the back of the device and insert them.

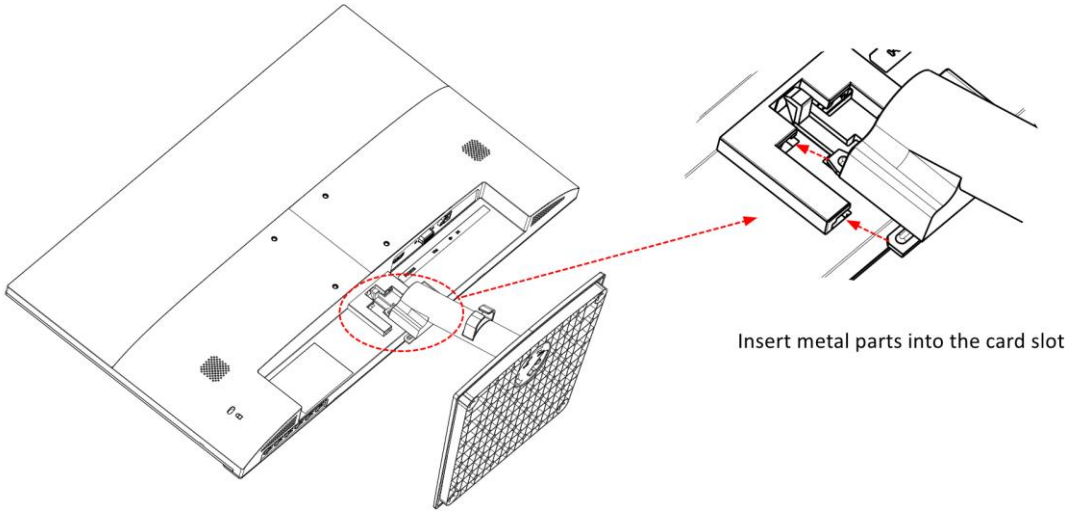

Figure 2-3 Insert the Metal Parts

Step 4 Installation finished.

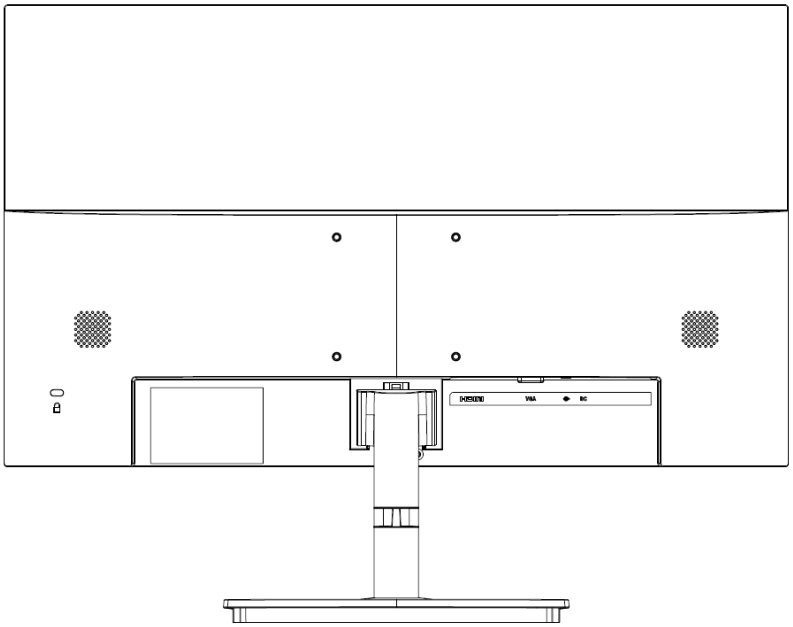

Figure 2-4 Fix the Bracket with the Device

Step 5 (Optional) To remove the square base, perform the following operations.

1) Press and hold the snapback on the back of the device, pan down and pull out the bracket.

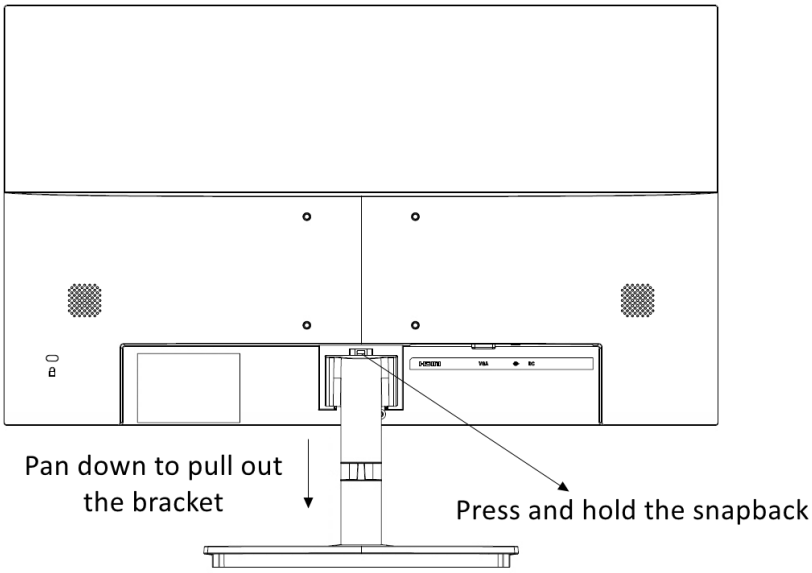

Figure 2-5 Remove the Device and Bracket

2) Fasten the buckle at the bottom of the base with your finger, and rotate the bracket in the direction indicated by OPEN to remove it from the square base.

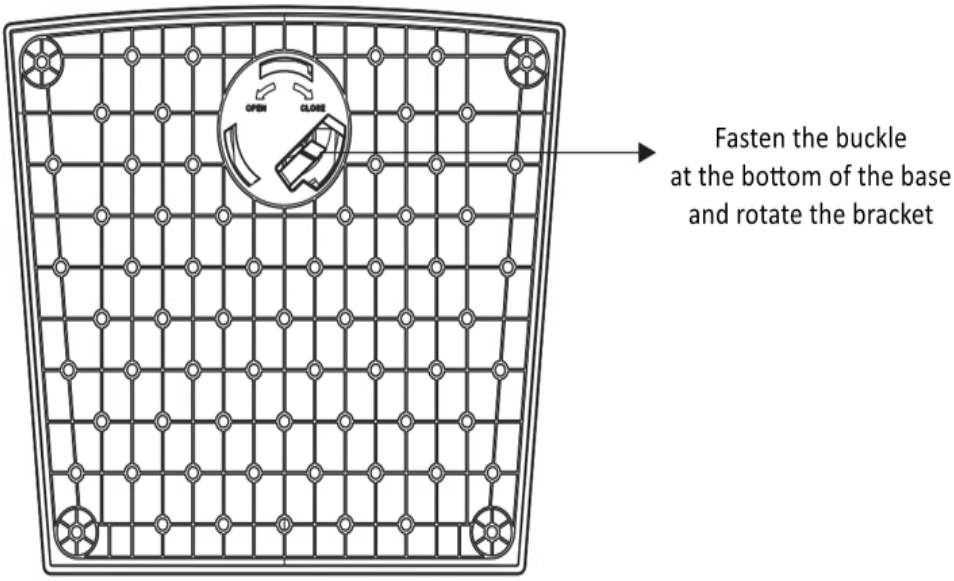

Figure 2-6 Remove the Bracket from the Square Base

2.2 Install the Herringbone Base

Step 1 Gently lift the device and place the screen down on a stable surface covered with a thick soft cloth so that the bottom of the device is close to the edge of the surface for mounting the bracket.

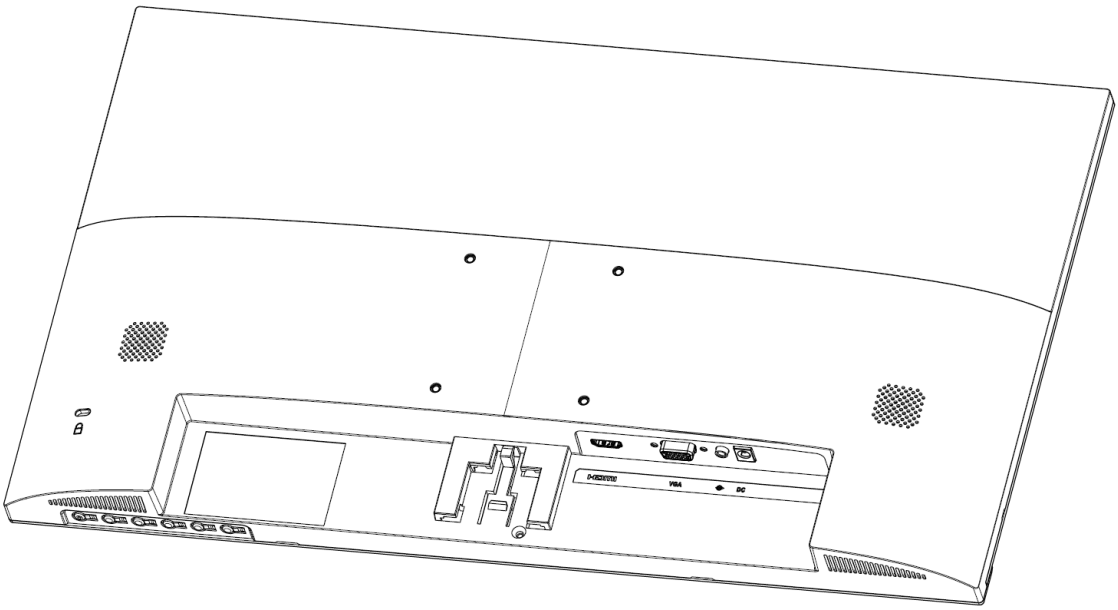

Figure 2-7 Place the Device Flatly

Step 2 Take out the bracket and the herringbone base from the packing box, and insert the bracket downward into the grooves of the herringbone base.

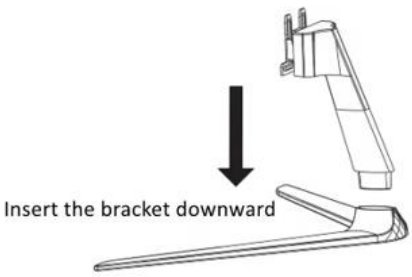

Figure 2-8 Install the Bracket

Step 3 Tighten the screw at the bottom of the base to secure the bracket to the base.

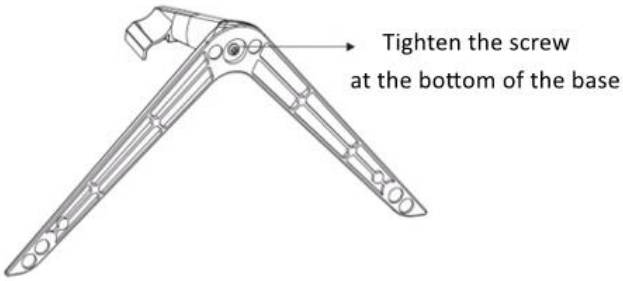

Figure 2-9 Tighten the Screw

Step 4 Install the bracket on the herringbone base.

Figure 2-10 Install the Bracket on the Herringbone Base

Step 5 Fix the bracket with the device. For details about how to secure a square base, see 2.1 Step 3.

Step 6 If the herringbone base needs to be removed, remove the bracket and device in the same way as the square base. For details, see 2.1 Step 5. When removing the bracket and base, loosen the screws at the bottom of the herringbone base and lift out the bracket.

2.3 Power On the Device

After connecting the adapter, plug the device into a well-grounded bar and turn on the switch to power on.

Caution

- Power supply: DC 12 V, 2 A.
- If you do not use the device for a long time, turn off the display switch and remove the power plug from the power socket.

Chapter 3 Basic Operations

The user interface may vary depending on the device model. The following image is used as an example.

3.1 Select the Signal Source

Connect the power cable and confirm that there is a video signal input, turn on the display.

Step 1 Press and show the signal source menu.

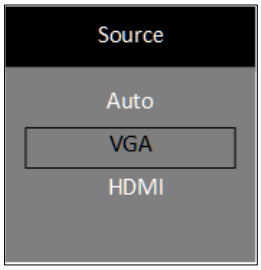

Figure 3-1 Select the Signal Source

Step 2 Press again to select the signal source and press to confirm.

3.2 Main Menu

Table 3-1 Operation Description

Operation	Description
Enter MENU page	Press to enter the main menu page.
View the first-level MENU	On the main menu page, press to switch to the different first-level menu.
View Parameters	On the first-level menu page, press to enter the right-side parameters page.
Adjust Parameters	Press or to adjust the value of the current parameter and press to confirm. Press to switch to other parameters on the current page.
Back to the upper-level menu	Press to return to the upper-level menu on any page.

3.2.1 Image Settings

You can switch picture modes and adjust image parameters including contrast, brightness, saturation, sharpness, and hue. The adjustable parameters will change when you switch picture modes.

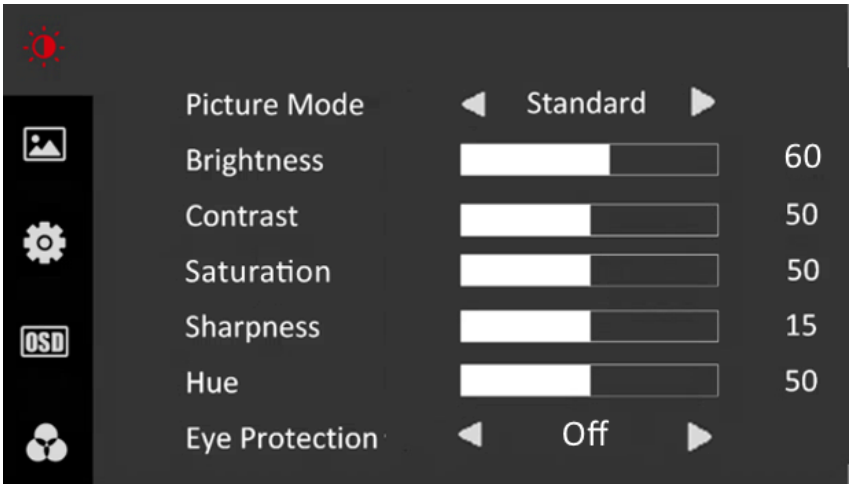

Figure 3-2 Image Settings

Table 3-2 Image Parameters

Parameter	Description
Picture Mode	● **Standard**: Suitable for a normal environment. It is the default picture mode. ● **Soft**: Suitable for a dark room. ● **Dynamic**: Suitable for a bright room. ● **User**: Customize the brightness, contrast, color, sharpness or hue to adjust display effect.
Brightness	Ranges from 0 to 100. The higher the value is, the brighter the image will be.
Contrast	Ranges from 0 to 100. The higher the value is, the clearer the image will be
Saturation	Ranges from 0 to 100. The higher the value is, the more colorful the image will be.
Sharpness	Ranges from 0 to 30. Rise the value up to make the image more vivid.
Hue	Ranges from 0 to 100. It determines the contrast degree between the bright and dark.
Eye Protection	Off/Weak/Medium/Strong. It can effectively reduce blue light radiation, alleviate eye fatigue, and protect vision.

Note

- Under other modes, only brightness and contrast are adjustable.
- Parameters in white bar are adjustable. If the parameter bar is gray, it indicates that the parameter is not adjustable under the current mode or input source.

3.2.2 VGA Settings

When you select VGA as the input source, you can adjust VGA parameters to make the picture shown in the correct position.

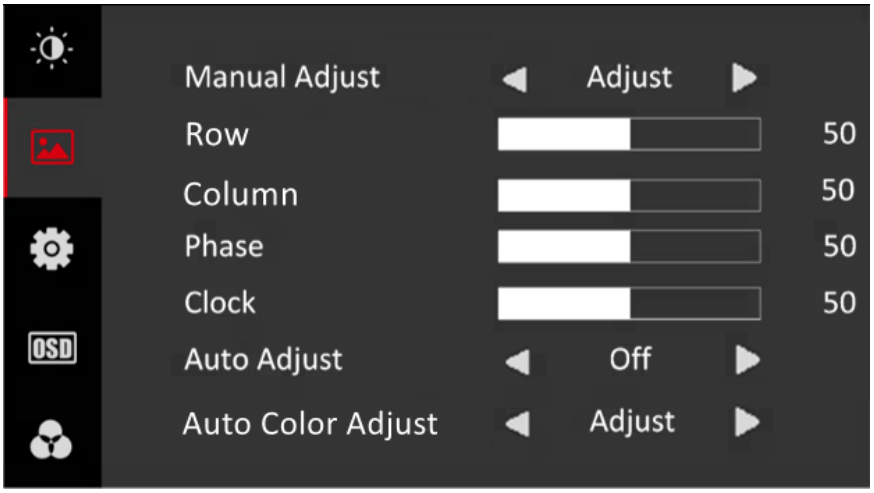

Figure 3-3 VGA Settings

Table 3-3 VGA Parameters

Parameter	Description
Manual Adjust	Press 〈 or 〉 to enable or disable. Adjust the size and position of the image.
Row	Ranges from 0 to 100. Move the image position to the left or right.
Column	Ranges from 0 to 100. Move the image position to the top or bottom.
Phase	Ranges from 0 to 100. Adjust the value of **Phase** to change the image position in a slight extent at the horizontal level.
Clock	Ranges from 0 to 100. Change the value of **Clock** to stretch or narrow the image.

Parameter	Description
Auto Adjust	Off/On. If **Auto Adjust** is enabled, the related parameters will self-adjust under the following 3 circumstances. The device is restarted, a VGA input source is accessed, and the input source is switched to VGA. VGA parameters cannot be changed when Auto Adjust is disabled.
Auto Color Adjust	Adjust/Off. When Auto Color Adjsut is enabled, the level change of analog signal will be readjusted to ensure the best display effect of the image.

3.2.3 System Settings

You can change the settings of language, screen saver, volume, and other parameters on the system settings page. Volume settings is only available to part of the product models.

Figure 3-4 System Settings

Table 3-4 System Parameters

Parameter	Description
Volume	Ranges from 0 to 100. Adjust the volume of the monitor.
Mute	OFF/ON
Language	中文/English/Русский/Deutsch/Italiano/Français/ Nederlands/Português/Español/Tiếng Việt/ Български/Magyar/Ελληνικά/Čeština/Slovenčina/ Polski/Română/Dansk/Svenska/Norsk/Suomi/Hrvatski/Srpski
User Restore	No/Yes. Restore default settings except Language.

Parameter	Description
Screen Saver	Black Screen/Blue Screen. The background color of the screen when there is no signal.
Auto Sleep	Off/30 S/1 Min/5 Min/10 Min/30 Min/1 H
Scaling Mode	16:9/4:3. Adjust the image scale: the ratio between the width and height of the image.

3.2.4 OSD Settings

OSD parameters concern the display effect of OSD, such as position, transparency, and rotation.

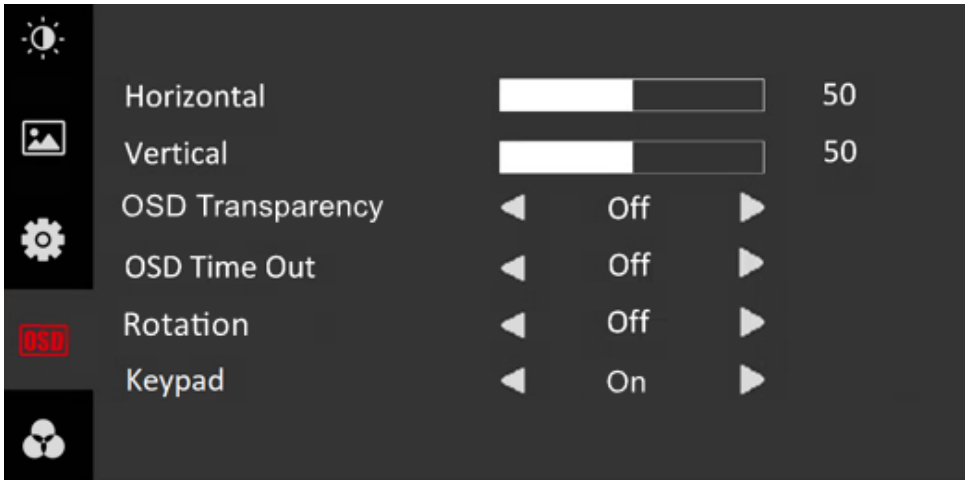

Figure 3-5 OSD Settings

Table 3-5 OSD Parameters

Parameter	Description
Horizontal	Ranges from 0 to 100. Adjust the OSD at the horizontal level.
Vertical	Ranges from 0 to 100. Adjust the OSD at the vertical level.
OSD Transparency	Off/Weak/Medium/Strong. Adjust the transparent degree of the OSD.
OSD Time Out	Off/5 S/15 S/30 S/1 Min
Rotation	Off/On. If **Rotation** is enabled, the OSD will rotate 270 degrees clockwise, and the point (0, 0) represents the original point and is at the bottom-left corner.

Parameter	Description
Keypad	Set to **On** by default. If set to **Off**, OSD will change within 5 seconds. If there is no operation within 5 seconds, the system will exit OSD mode and you can press any button to see unlocking prompt. You can follow the prompt and hold Menu to unlock.

3.2.5 Software Version

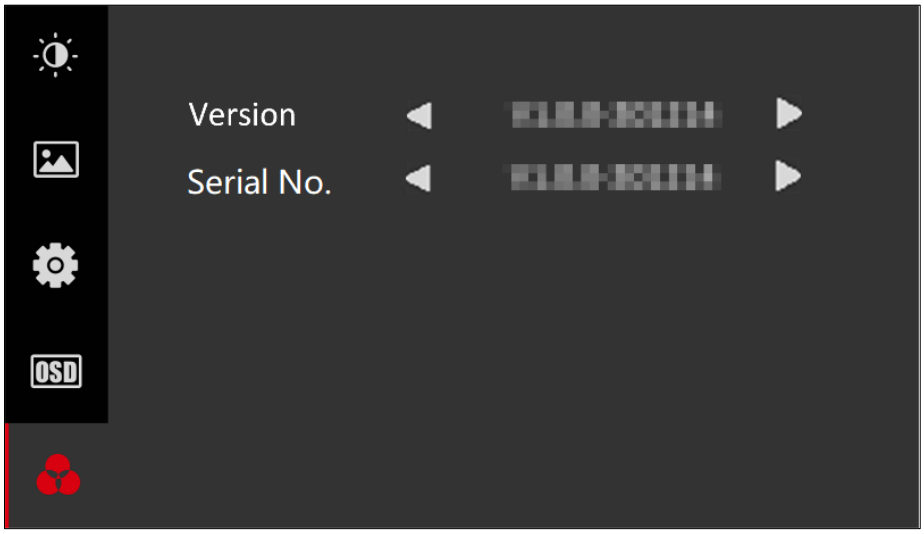

Figure 3-6 Software Version

See Far, Go Further

UD38459B