Touch-Screen Module

User Manual

Legal Information

About this Document

- This Document includes instructions for using and managing the Product. Pictures, charts, images and all other information hereinafter are for description and explanation only.
- The information contained in the Document is subject to change, without notice, due to firmware updates or other reasons. Please find the latest version of the Document at the Hikvision website (***https://www.hikvision.com***). Unless otherwise agreed, Hangzhou Hikvision Digital Technology Co., Ltd. or its affiliates (hereinafter referred to as "Hikvision") makes no warranties, express or implied.
- Please use the Document with the guidance and assistance of professionals trained in supporting the Product.

About this Product

This product can only enjoy the after-sales service support in the country or region where the purchase is made.

Acknowledgment of Intellectual Property Rights

- Hikvision owns the copyrights and/or patents related to the technology embodied in the Products described in this Document, which may include licenses obtained from third parties.
- Any part of the Document, including text, pictures, graphics, etc., belongs to Hikvision. No part of this Document may be excerpted, copied, translated, or modified in whole or in part by any means without written permission.
- HIKVISION and other Hikvision's trademarks and logos are the properties of Hikvision in various jurisdictions.
- Other trademarks and logos mentioned are the properties of their respective owners.

LEGAL DISCLAIMER

- TO THE MAXIMUM EXTENT PERMITTED BY APPLICABLE LAW, THIS DOCUMENT AND THE PRODUCT DESCRIBED, WITH ITS HARDWARE, SOFTWARE AND FIRMWARE, ARE PROVIDED "AS IS" AND "WITH ALL FAULTS AND ERRORS". HIKVISION MAKES NO WARRANTIES, EXPRESS OR IMPLIED, INCLUDING WITHOUT LIMITATION, MERCHANTABILITY, SATISFACTORY QUALITY, OR FITNESS FOR A PARTICULAR PURPOSE. THE USE OF THE PRODUCT BY YOU IS AT YOUR OWN RISK. IN NO EVENT WILL HIKVISION BE LIABLE TO YOU FOR ANY SPECIAL, CONSEQUENTIAL, INCIDENTAL, OR INDIRECT DAMAGES, INCLUDING, AMONG OTHERS, DAMAGES FOR LOSS OF BUSINESS PROFITS, BUSINESS INTERRUPTION, OR LOSS OF DATA, CORRUPTION OF SYSTEMS, OR LOSS OF DOCUMENTATION, WHETHER BASED ON BREACH OF CONTRACT, TORT (INCLUDING NEGLIGENCE), PRODUCT LIABILITY, OR OTHERWISE, IN CONNECTION WITH THE USE OF THE

PRODUCT, EVEN IF HIKVISION HAS BEEN ADVISED OF THE POSSIBILITY OF SUCH DAMAGES OR LOSS.

- YOU ACKNOWLEDGE THAT THE NATURE OF THE INTERNET PROVIDES FOR INHERENT SECURITY RISKS, AND HIKVISION SHALL NOT TAKE ANY RESPONSIBILITIES FOR ABNORMAL OPERATION, PRIVACY LEAKAGE OR OTHER DAMAGES RESULTING FROM CYBER-ATTACK, HACKER ATTACK, VIRUS INFECTION, OR OTHER INTERNET SECURITY RISKS; HOWEVER, HIKVISION WILL PROVIDE TIMELY TECHNICAL SUPPORT IF REQUIRED.
- YOU AGREE TO USE THIS PRODUCT IN COMPLIANCE WITH ALL APPLICABLE LAWS, AND YOU ARE SOLELY RESPONSIBLE FOR ENSURING THAT YOUR USE CONFORMS TO THE APPLICABLE LAW. ESPECIALLY, YOU ARE RESPONSIBLE, FOR USING THIS PRODUCT IN A MANNER THAT DOES NOT INFRINGE ON THE RIGHTS OF THIRD PARTIES, INCLUDING WITHOUT LIMITATION, RIGHTS OF PUBLICITY, INTELLECTUAL PROPERTY RIGHTS, OR DATA PROTECTION AND OTHER PRIVACY RIGHTS. YOU SHALL NOT USE THIS PRODUCT FOR ANY PROHIBITED END-USES, INCLUDING THE DEVELOPMENT OR PRODUCTION OF WEAPONS OF MASS DESTRUCTION, THE DEVELOPMENT OR PRODUCTION OF CHEMICAL OR BIOLOGICAL WEAPONS, ANY ACTIVITIES IN THE CONTEXT RELATED TO ANY NUCLEAR EXPLOSIVE OR UNSAFE NUCLEAR FUEL-CYCLE, OR IN SUPPORT OF HUMAN RIGHTS ABUSES.
- IN THE EVENT OF ANY CONFLICTS BETWEEN THIS DOCUMENT AND THE APPLICABLE LAW, THE LATTER PREVAILS.

© Hangzhou Hikvision Digital Technology Co., Ltd. All rights reserved.

Symbol Conventions

The symbols that may be found in this document are defined as follows.

Symbol	Description
Danger	Indicates a hazardous situation which, if not avoided, will or could result in death or serious injury.
Caution	Indicates a potentially hazardous situation which, if not avoided, could result in equipment damage, data loss, performance degradation, or unexpected results.
Note	Provides additional information to emphasize or supplement important points of the main text.

Regulatory Information

EU Conformity Statement

This product and - if applicable - the supplied accessories too are marked with "CE" and comply therefore with the applicable harmonized European standards listed under the EMC Directive 2014/30/EU, the RoHS Directive 2011/65/EU

2012/19/EU (WEEE directive): Products marked with this symbol cannot be disposed of as unsorted municipal waste in the European Union. For proper recycling, return this product to your local supplier upon the purchase of equivalent new equipment, or dispose of it at designated collection points. For more information see: www.recyclethis.info

2006/66/EC (battery directive): This product contains a battery that cannot be disposed of as unsorted municipal waste in the European Union. See the product documentation for specific battery information. The battery is marked with this symbol, which may include lettering to indicate cadmium (Cd), lead (Pb), or mercury (Hg). For proper recycling, return the battery to your supplier or to a designated collection point. For more information see:www.recyclethis.info

Industry Canada ICES-003 Compliance

This device meets the CAN ICES-3 (B)/NMB-3(B) standards requirements.
This device complies with Industry Canada licence-exempt RSS standard(s). Operation is subject to the following two conditions:

1. this device may not cause interference, and
2. this device must accept any interference, including interference that may cause undesired operation of the device.

Le présent appareil est conforme aux CNR d'Industrie Canada applicables aux appareils radioexempts de licence. L'exploitation est autorisée aux deux conditions suivantes :

1. l'appareil ne doit pas produire de brouillage, et
2. l'utilisateur de l'appareil doit accepter tout brouillage radioélectrique subi, même si le brouillage est susceptible d'en compromettre le fonctionnement.

Under Industry Canada regulations, this radio transmitter may only operate using an antenna of a type and maximum (or lesser) gain approved for the transmitter by Industry Canada. To reduce potential radio interference to other users, the antenna type and its gain should be so chosen that the equivalent isotropically radiated power (e.i.r.p.) is not more than that necessary for successful communication.

Conformément à la réglementation d'Industrie Canada, le présent émetteur radio peut fonctionner avec une antenne d'un type et d'un gain maximal (ou inférieur) approuvé pour l'émetteur par Industrie Canada. Dans le but de réduire les risques de brouillage radioélectrique à l'intention des autres utilisateurs, il faut choisir le type d'antenne et son gain de sorte que la puissance isotrope rayonnée équivalente (p.i.r.e.) ne dépasse pas l'intensité nécessaire à l'établissement d'une communication satisfaisante.
This equipment should be installed and operated with a minimum distance 20cm between the radiator and your body.
Cet équipement doit être installé et utilisé à une distance minimale de 20 cm entre le radiateur et votre corps.

Contents

Chapter 1 Appearance 1

Chapter 2 Configure Sub Module Address 2

Chapter 3 Configuration Flow of the Touch-Display Module 4

Chapter 4 Terminal and Wiring 5

4.1 Terminal Description 5

Chapter 5 Installation 6

5.1 Two-Module Installation 7

5.1.1 Two-Module Surface Mounting 7

5.1.2 Two-Module Flush Mounting 12

5.2 Three-Module Installation 18

5.2.1 Three-Module Surface Installation 18

5.2.2 Three-Module Flush Mounting 25

5.3 More-Than-Three Module Installation 30

5.3.1 More-than-Three Module Surface Mounting 30

5.3.2 More-Than-Three Module Flush Mounting 39

Chapter 6 Local Operation 48

6.1 Call Resident 48

6.2 Issue Card 49

6.3 Unlock Door 50

Chapter 7 Configuration and Operation 52

7.1 Configuration via Web Client of the Main Unit 52

7.1.1 Configuration via Web 4.0 52

7.1.2 Configuration via PC Web 5.0 or Mobile Web 56

7.2 Configuration via Client Software of the Main Unit 64

7.2.1 Device Management 64

7.2.2 Remote Configuration via Client Software 67

Chapter 1 Appearance

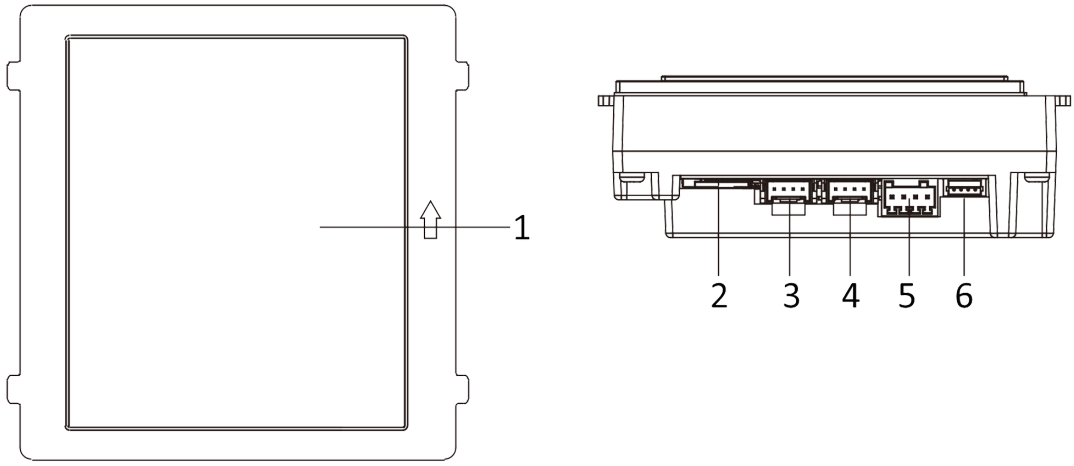

Figure 1-1 Touch-Display Module

Table 1-1 Description

No.	Description
1	Touch-Display Area
2	TF Card Slot
3	Module-connecting Interface (output)
4	Module-connecting Interface (input)
5	Video & Audio Terminal
6	Debugging Port

Note

The debugging port is used for debugging only.

Chapter 2 Configure Sub Module Address

You need to set the sub module address via DIP switch before installation.

Steps

1. Remove the rubber cover on the rear panel of the sub module to expose the DIP switch.

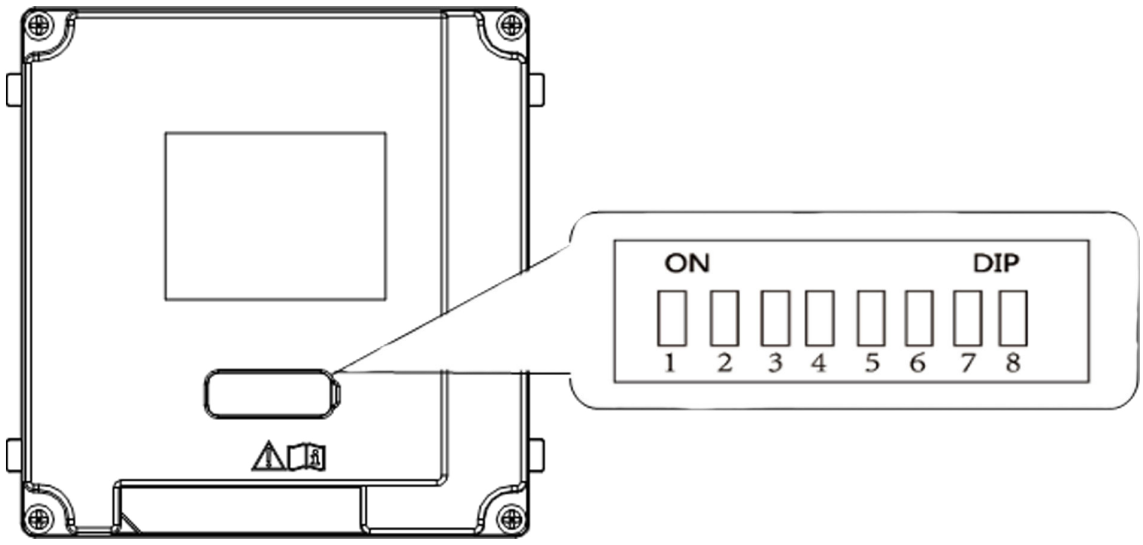

Figure 2-1 DIP Switch

2. Set the sub module address according to the DIP rules, and install the rubber cover back.

Note

- DIP 1, 2, 3, 4 are used to coding the sub module address. DIP 5, 6, 7, 8 are reserved.
- Valid sub module address is from 1 to 8. The address should be unique for connecting to the main unit.
  The sub module address and its corresponding switch status are displayed as below.

Sub Module Address	DIP 1	DIP 2	DIP 3	DIP 4	DIP 5	DIP 6	DIP 7	DIP 8
Module 1	ON	OFF	OFF	OFF	OFF	OFF	OFF	OFF
Module 2	OFF	ON	OFF	OFF	OFF	OFF	OFF	OFF
Module 3	ON	ON	OFF	OFF	OFF	OFF	OFF	OFF
Module 4	OFF	OFF	ON	OFF	OFF	OFF	OFF	OFF
Module 5	ON	OFF	ON	OFF	OFF	OFF	OFF	OFF

Sub Module Address	DIP 1	DIP 2	DIP 3	DIP 4	DIP 5	DIP 6	DIP 7	DIP 8
Module 6	OFF	ON	ON	OFF	OFF	OFF	OFF	OFF
Module 7	ON	ON	ON	OFF	OFF	OFF	OFF	OFF
Module 8	OFF	OFF	OFF	ON	OFF	OFF	OFF	OFF

Chapter 3 Configuration Flow of the Touch-Display Module

You can configure the touch-display module through the following flow.

Table 3-1 Configuration Flow of the Touch-Display Module

Configuration Steps	Details
1. Set sub module address of touch-display module.	Please refer to: ***Configure Sub Module Address***
2. Wiring and Installation of the Touch-Display Module	Please refer to: • ***Terminal and Wiring*** • ***Installation***
3. Configure the Touch-Display Module via the Web Client of the Main Unit or Client Software	• Configure the Touch-Display Module via Web Client of the Main Unit: ***Configuration via Web 4.0*** • Configure the Fingerprint & Card Reader Module via PC Web 5.0 or Mobile Web: ***Configuration via PC Web 5.0 or Mobile Web*** • Configure the Fingerprint & Card Reader Module via Client Software: ***Configuration via Client Software of the Main Unit***
4. You can call residents, issue card or unlock door via the touch-display module.	• ***Call Resident*** • ***Issue Card*** • ***Unlock Door***

Chapter 4 Terminal and Wiring

4.1 Terminal Description

Touch-Display Module

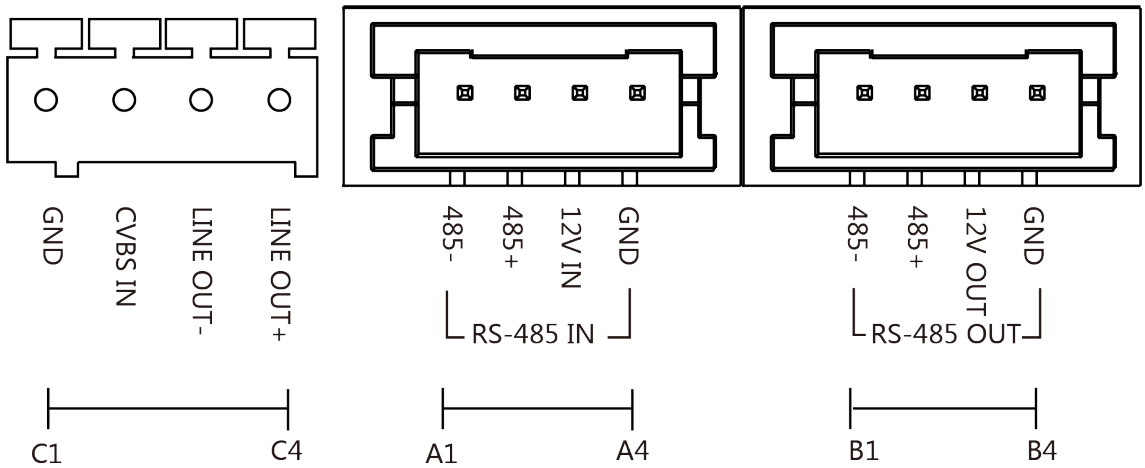

Figure 4-1 Touch-Display Module

Table 4-1 Description

No.	Interface	Description
A1	485-	Module-Connecting Interface (Input)
A2	485+	
A3	12V IN	
A4	GND	
B1	485-	Module-Connecting Interface (Output)
B2	485+	
B3	12V OUT	
B4	GND	
C1	GND	Grounding Interface
C2	CVSB IN	Composite Video Broadcast Signal Input (Reserved)
C3	LINEOUT-	Audio Output (Reserved)
C4	LINEOUT+	

Chapter 5 Installation

Note

- Sub module must work along with the main unit.
- Sub modules share the same approach of the installation. The sub modules in installation images are for reference only.
- Make sure the device in the package is in good condition and all the assembly parts are included.
- Set the sub module address before start the installation steps.
- Make sure the place for surface mounting is flat.
- Make sure all the related equipment is power-off during the installation.
- Tools that you need to prepare for installation:
  Drill (ø6), cross screwdriver (PH1*150 mm), and gradienter.

5.1 Two-Module Installation

5.1.1 Two-Module Surface Mounting

Before You Start

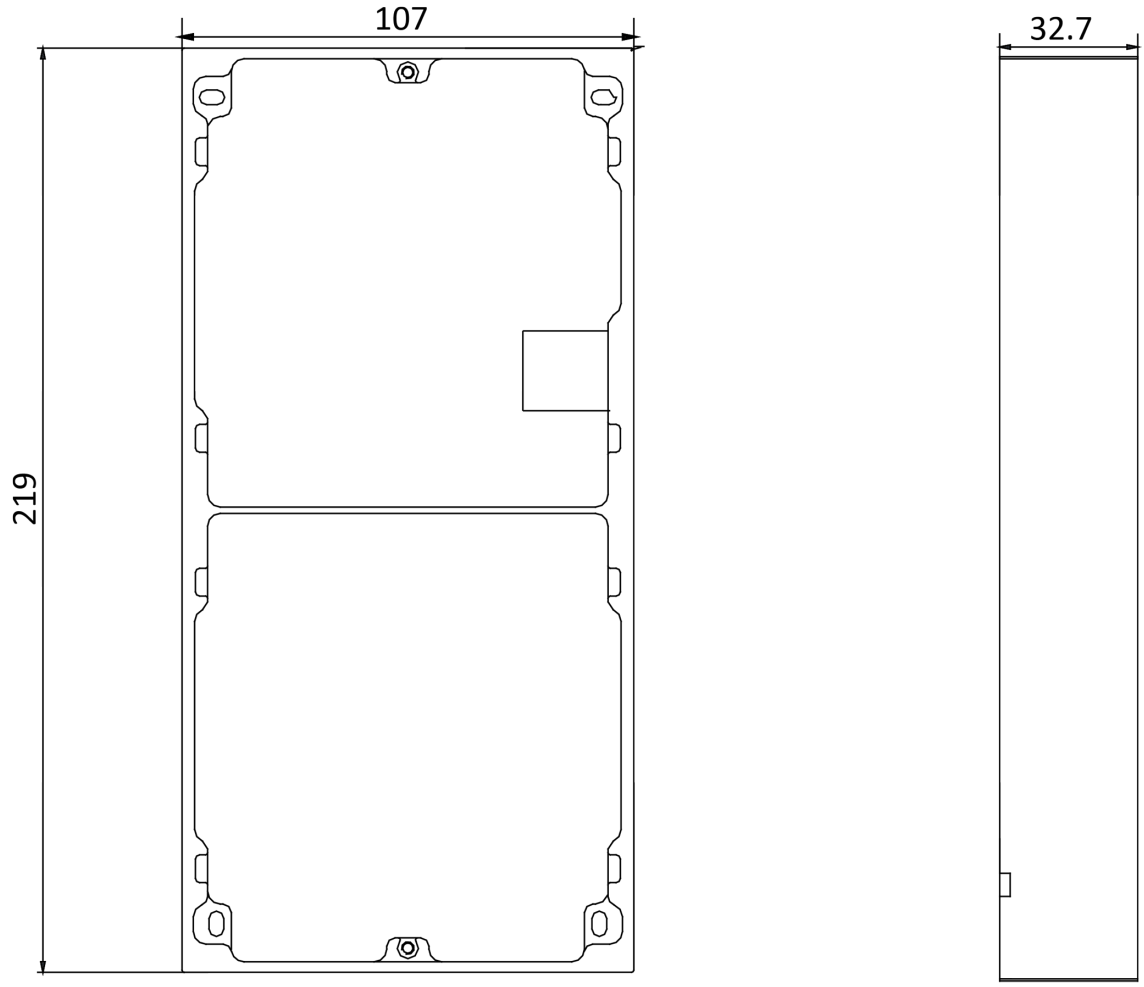

Figure 5-1 Mounting Frame

Note

- The dimension of two-module mounting frame (W × H × D) is: 219 mm × 107 mm × 32.7 mm.
- The dimensions above are for reference only. The actual size can be slightly different from the theoretical dimension.

Steps

1. Paste the installation Sticker 1 onto the wall. Make sure the sticker is placed horizontally via measuring with the gradienter.
2. Drill 4 holes according to the screw holes on the sticker. The suggested size of hole is 6 (diameter) × 25 (depth) mm. The suggested length of cables left outside is 270 mm.

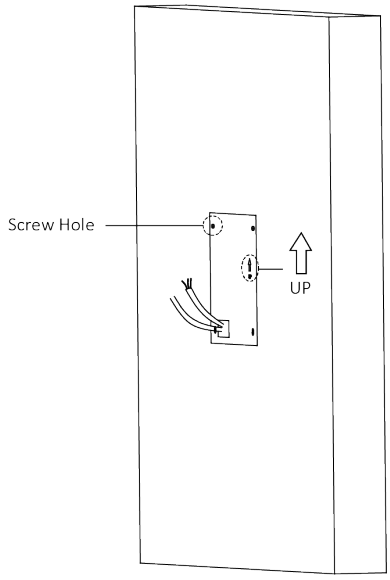

Figure 5-2 Drill Screw Holes

3. Remove the sticker and insert the expansion sleeves into the screw holes.
4. Fix the mounting frame onto the wall with 4 expansion bolts.

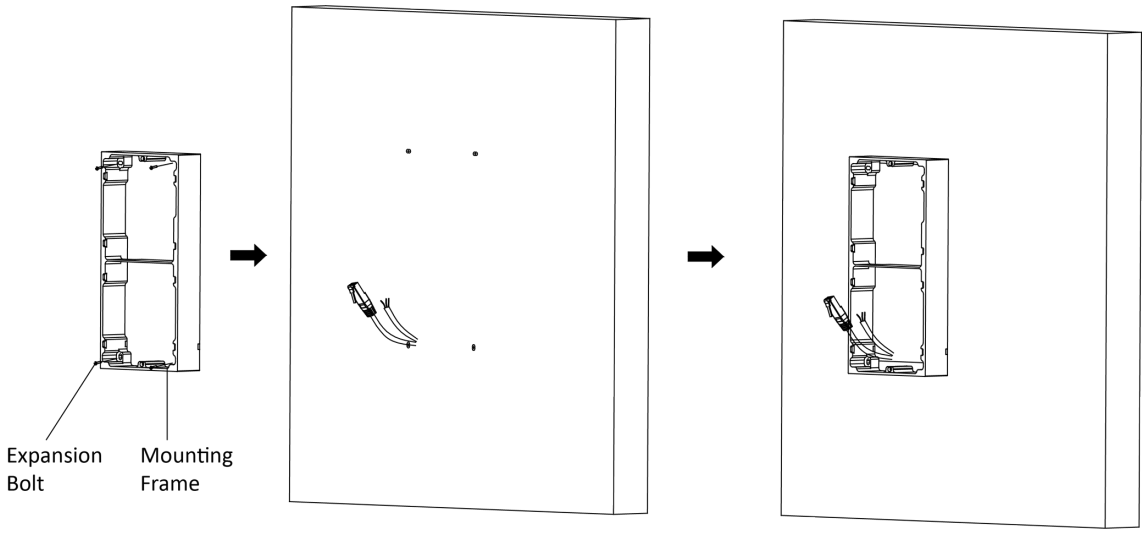

Figure 5-3 Fix the Mounting Frame

5. Thread the module-connecting line across the thread hole of the frame. Pass the main unit connecting lines across the thread hole to the upper grid.

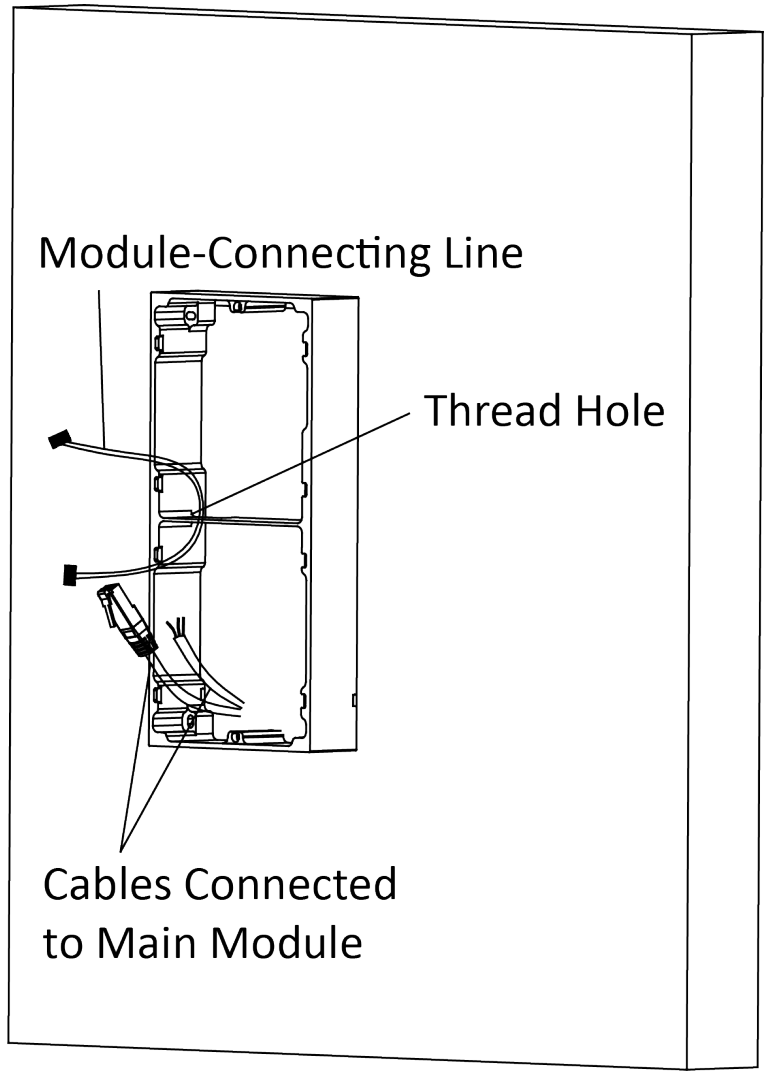

Figure 5-4 Placement of Lines

6. Connect the cables.

1) Connect the lines and module-connecting line to the corresponding interfaces of the main unit, then place the main unit into the upper grid.
2) Connect the other end of the module-connecting line to the input interface of the sub module.
3) Organize the cable with cable tie in the package. The suggested cable connection picture as shown below.

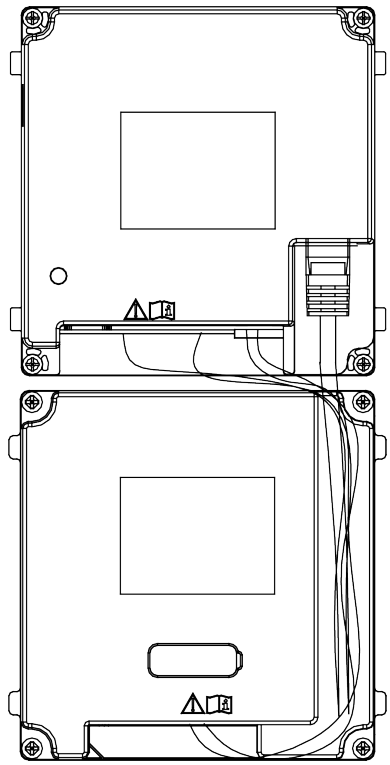

Figure 5-5 Line Connection Effect Picture

7. Insert the modules into the frame after wiring. The main unit must be placed in the top grid.

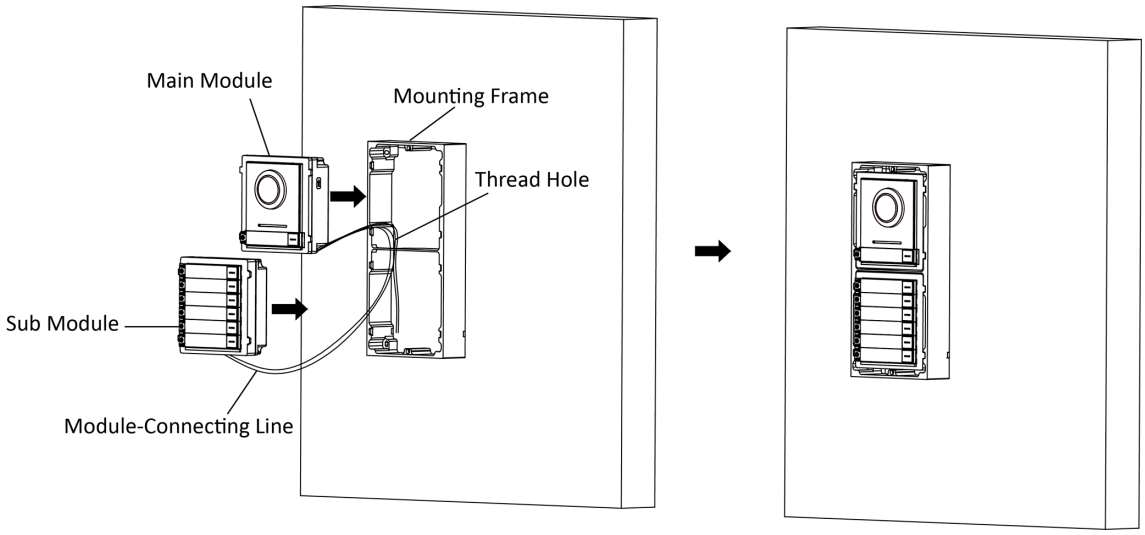

Figure 5-6 Insert the Modules

8. Use the hexagon wrench in the package to fix the cover onto the frame.

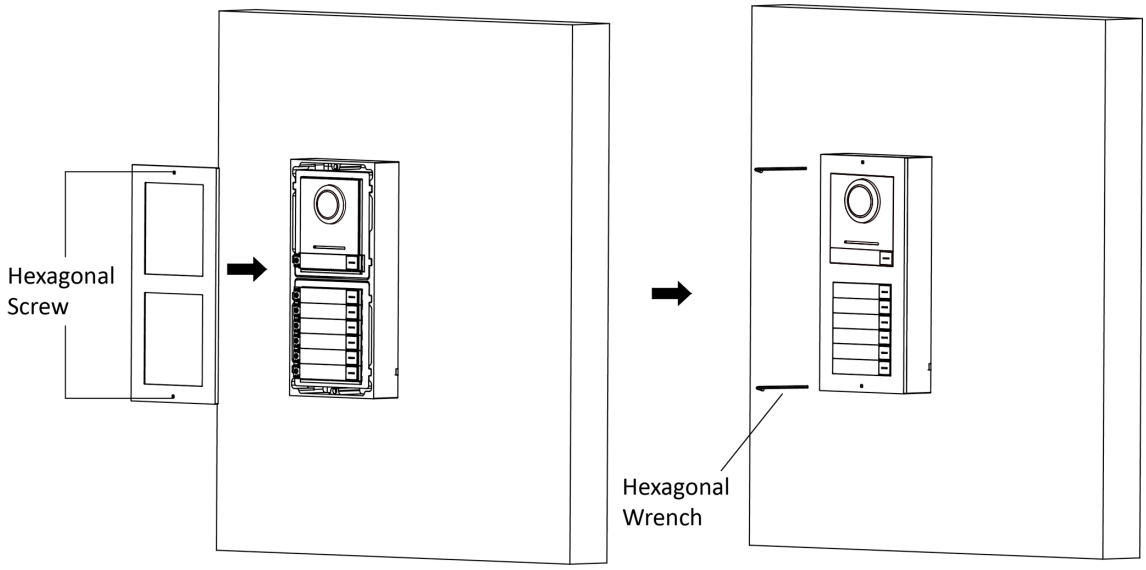

Figure 5-7 Fix the Cover

5.1.2 Two-Module Flush Mounting

Before You Start

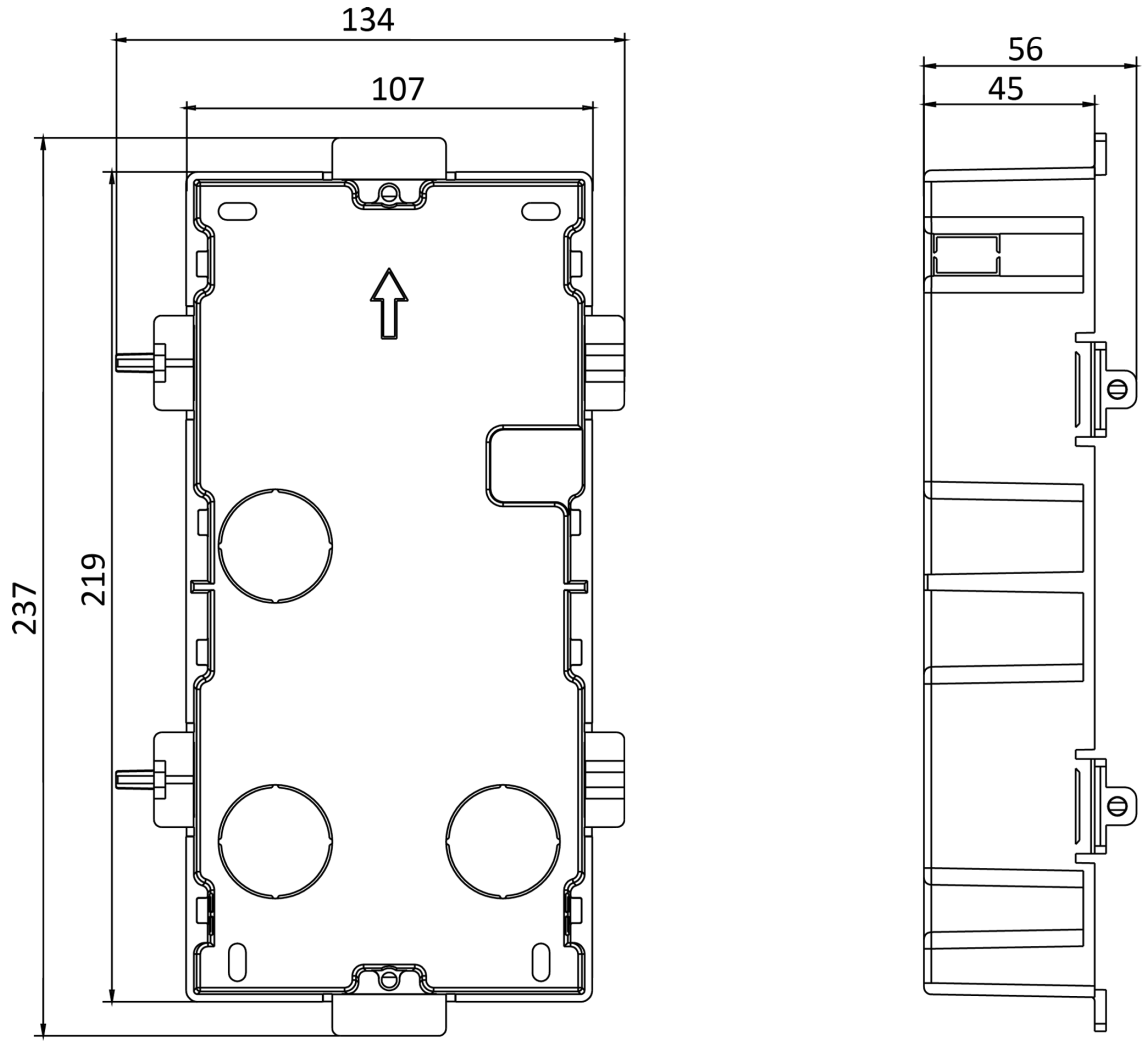

Figure 5-8 Gang Box

Note

The dimension of two-module gang box is: 237 (W) × 134 (H) × 56 (D) mm. The dimension is for reference only.

Steps

1. Drill the installation hole, and pull the cable out.

Note

- The suggested dimension of installation hole is 220 (W) × 108 (H) × 45.5 (D) mm.
- The suggested length of cables left outside is 270 mm.

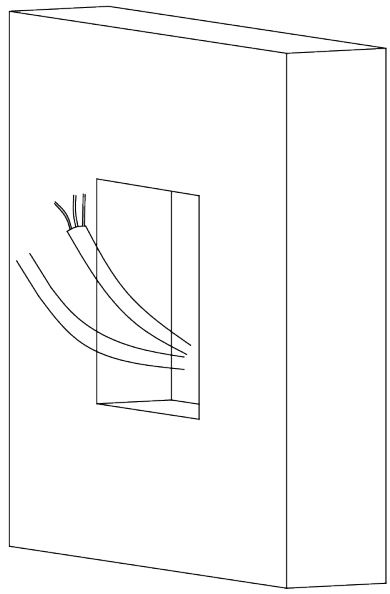

Figure 5-9 Drill the Installation Hole

2. Select a cable entry and remove the plastic sheet.

3. Mark the gang box screw holes on the hole.

1) Routs the cables through the gang box hole.
2) Insert the gang box into the installation hole.
3) Mark the gang box screw holes' position with a marker, and take out the gang box.

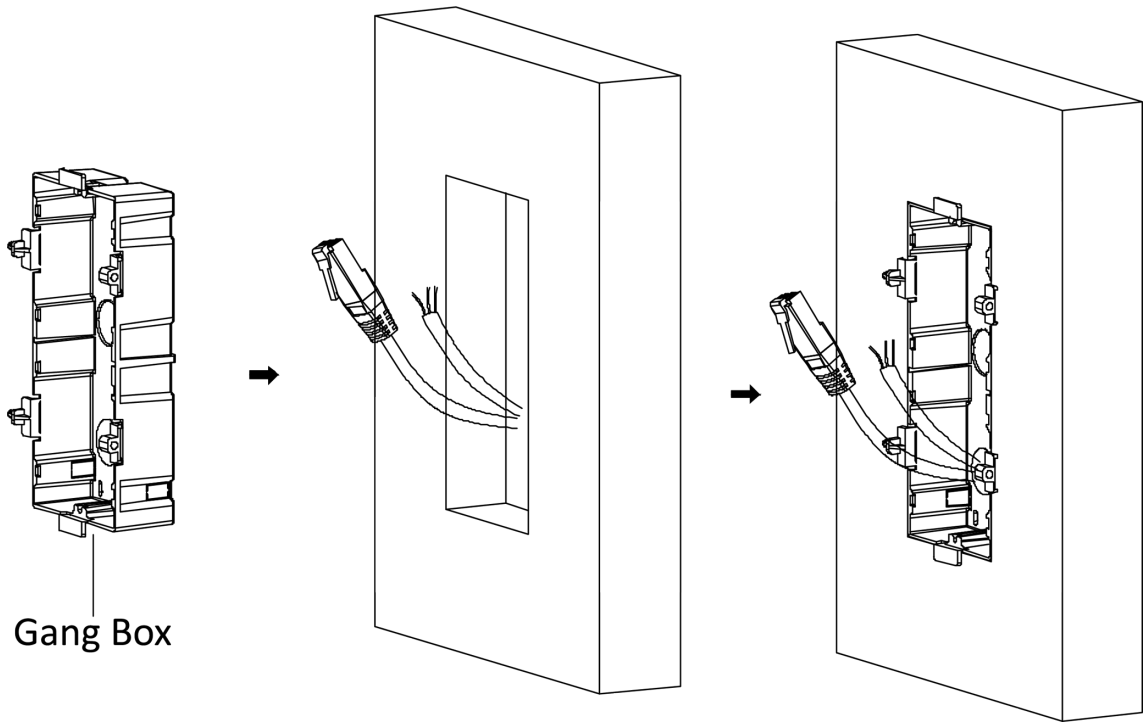

Figure 5-10 Mark the Screw Holes

4. Drill 4 holes according to the marks on the wall, and insert the expansion sleeves into the screw holes. The suggested size of hole is 6 (diameter) × 45 (depth) mm.

5. Fix the gang box with 4 expansion bolts.

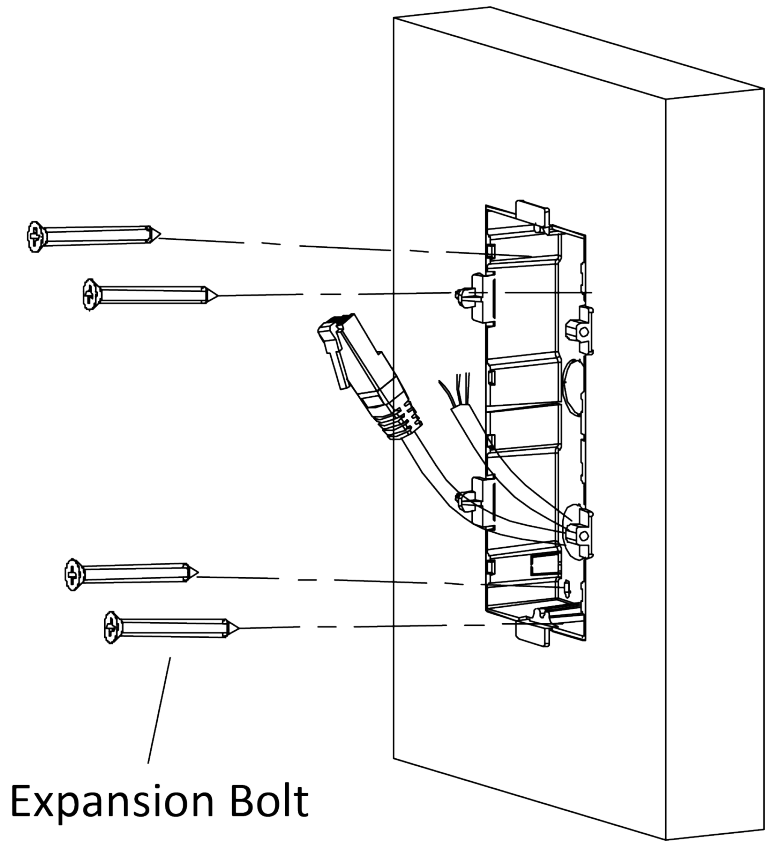

Figure 5-11 Fix the Gang Box

6. Fill the gap between the gang box and the wall with concrete. Remove the mounting ears with tool after concrete is dry.

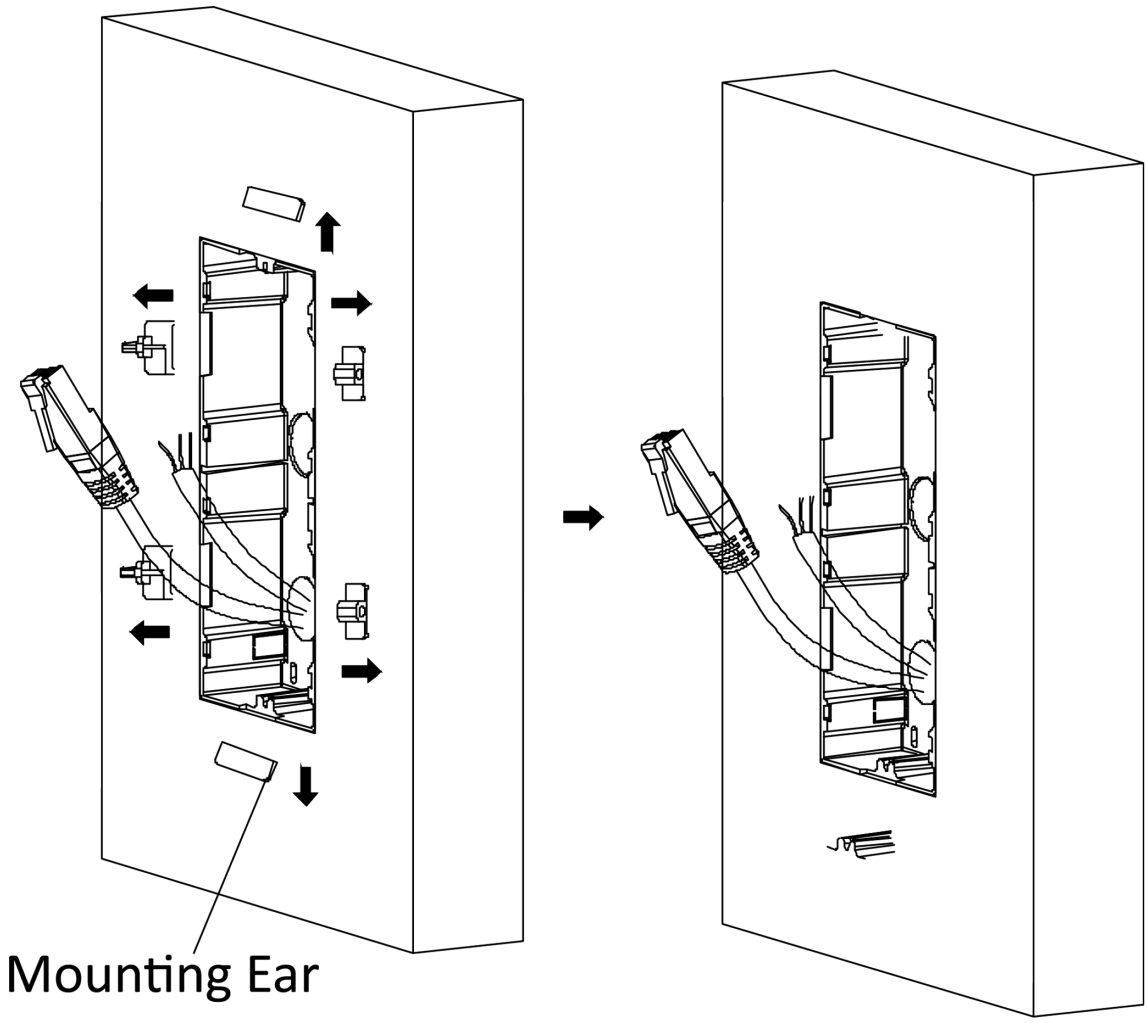

Figure 5-12 Remove the Mounting Ears

7. Connect cables and insert the modules.

1) Connect Cable 1 and one end of Cable 2 to the corresponding interfaces of the main unit, then insert the main unit into the upper grid.
2) Connect the other end of Cable 2 to the input interface of the sub module. Insert it into the lower grid.

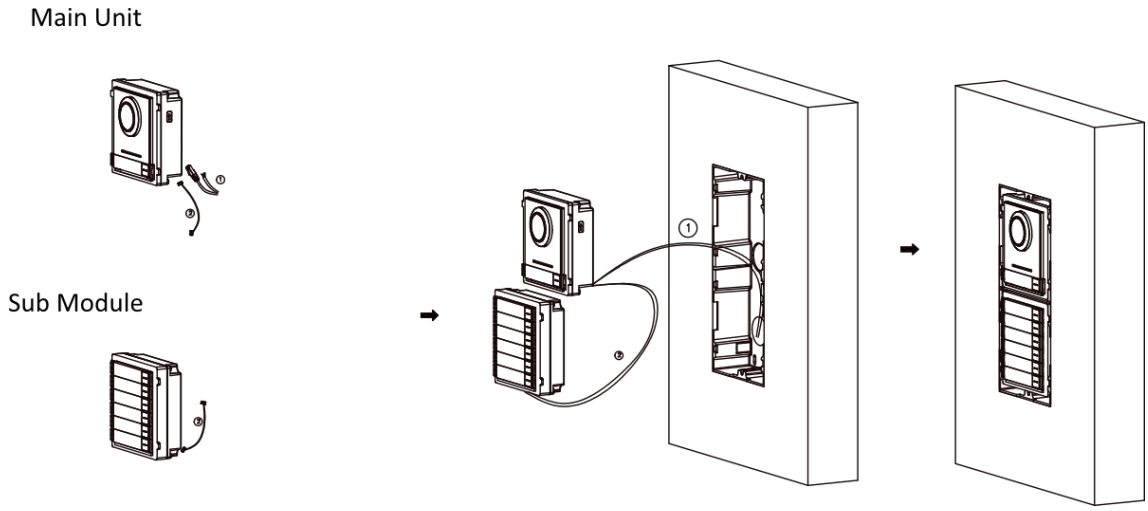

Figure 5-13 Connect Cables and Insert the Modules

Note

Cable 1 refers to the cables pulled out from the wall that connected to the main unit. Cable 2 refers to the module-connecting line in the accessory package.

8. Fix the cover with 2 socket head cap screws by using a hexagon wrench (supplied).

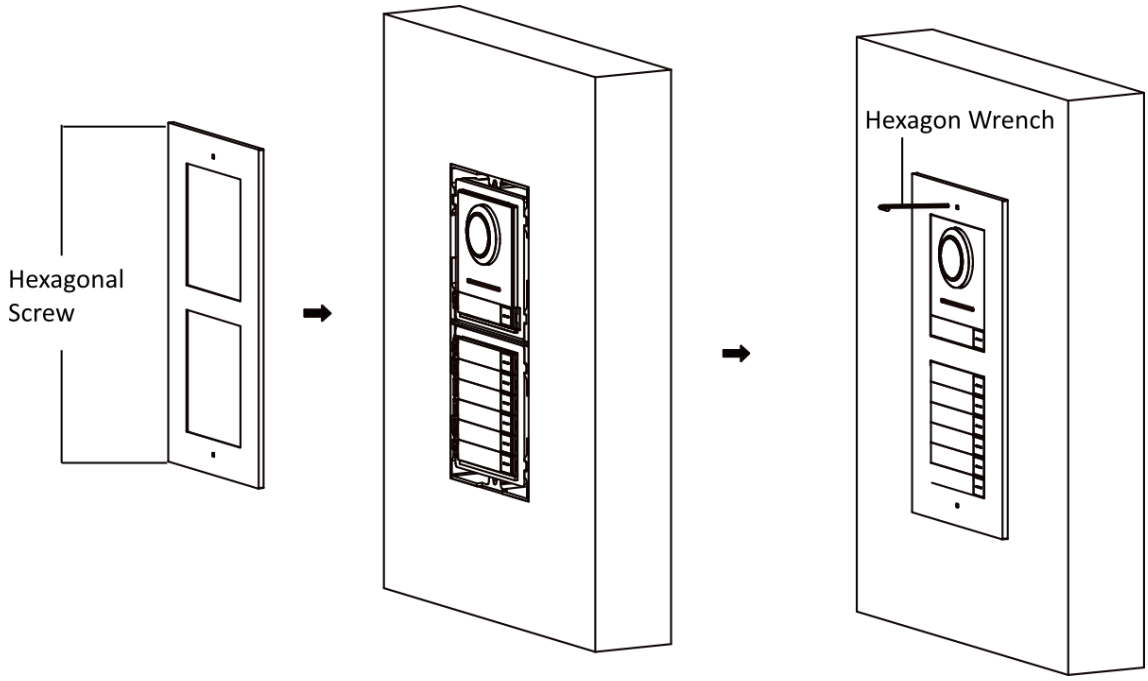

Figure 5-14 Fix the Cover

5.2 Three-Module Installation

5.2.1 Three-Module Surface Installation

Before You Start

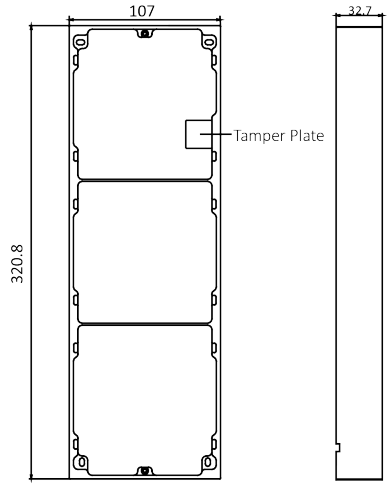

Figure 5-15 Mounting Frame

Note

- The dimension of two-module mounting frame (W × H × D) is: 320.8 mm × 107 mm × 32.7 mm.
- The dimensions above are for reference only. The actual size can be slightly different from the theoretical dimension.

Steps

1. Paste the installation sticker 1 onto the wall. Make sure the sticker is placed horizontally via measuring with the gradienter.
2. Drill 4 holes according to the screw holes on the sticker.The suggested size of hole is 6 (diameter) × 25 (depth) mm. The suggested length of cables left outside is 270 mm.

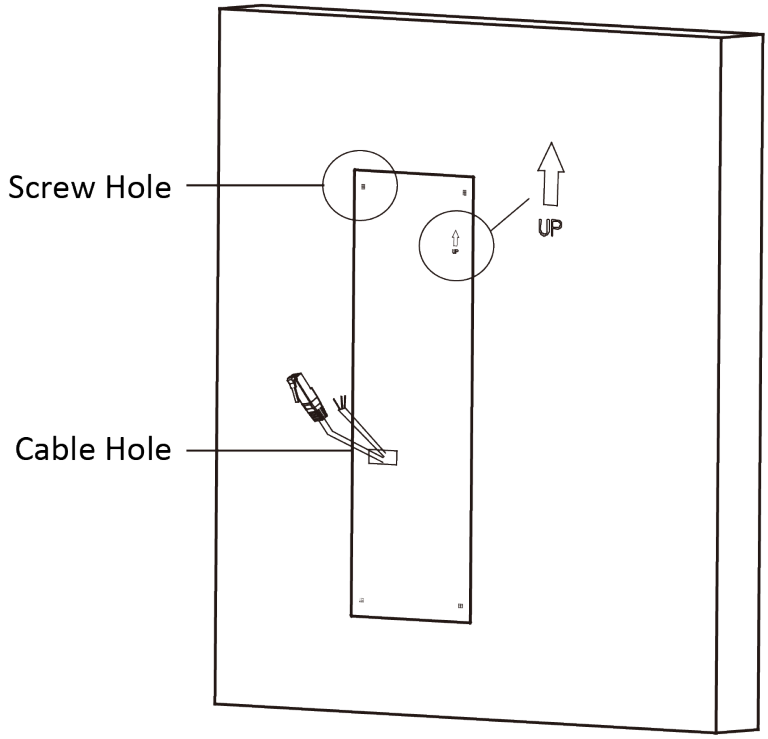

Figure 5-16 Drill Screw Holes

3. Remove the sticker and insert the expansion sleeves into the screw holes.

4. Fix the mounting frame onto the wall with 4 expansion bolts.

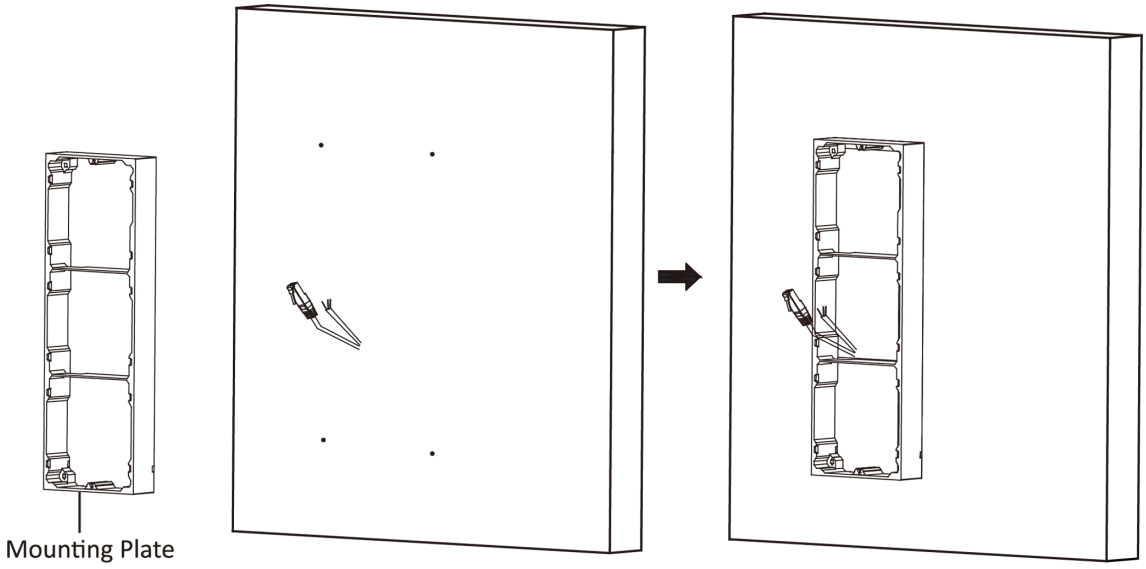

Figure 5-17 Fix the Mounting Frame

Note

The mounting frame should be placed exactly as shown below for this step. The tamper plate should be at the low right of the first grid.

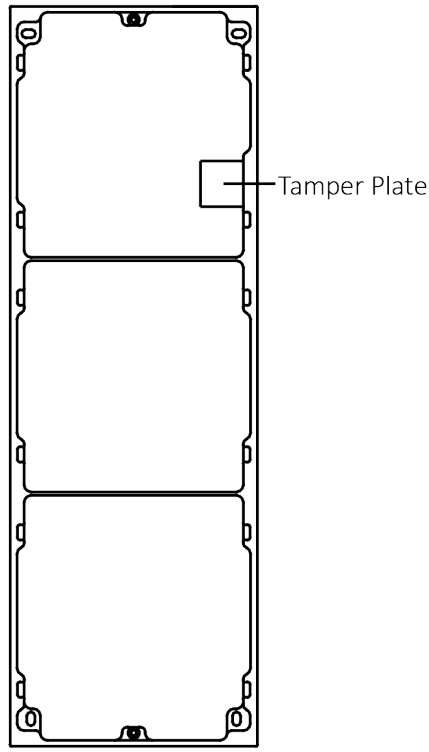

Figure 5-18 Mounting Frame

5. Thread the module-connecting line across the thread holes of the frame. Pass the main unit connecting line across the thread hole to the top grid.

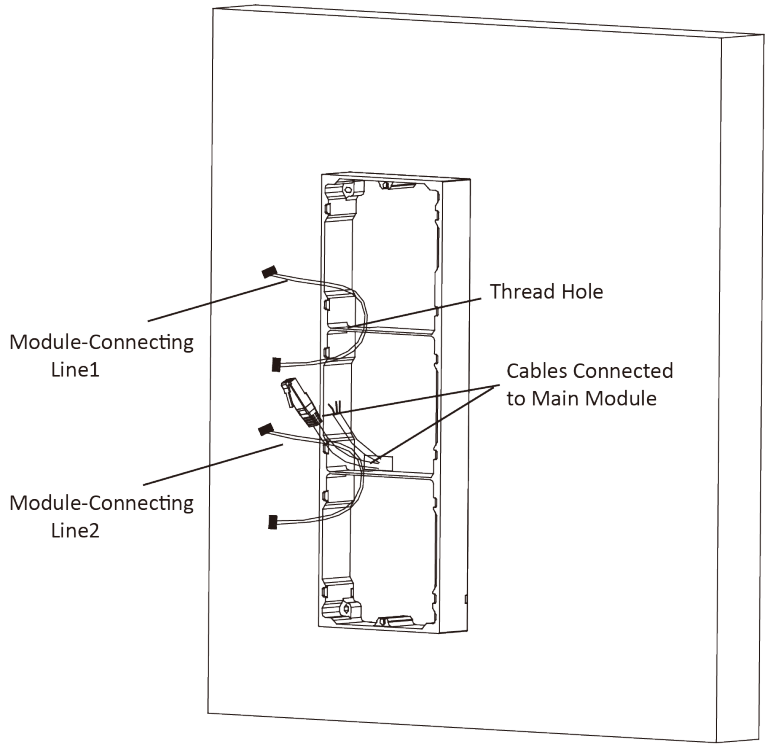

Figure 5-19 Placement of Lines

6. Connect the cables.

1) Connect the lines and module-connecting line 1 to the corresponding interfaces of the main unit, then place the main unit into the upper grid.
2) Connect the other end of the module-connecting line 1 to the input interface of the sub module. Connect two sub modules via module-connecting line 2.
3) Organize the cables with cable tie in the package. The suggested cable connection picture as shown below.

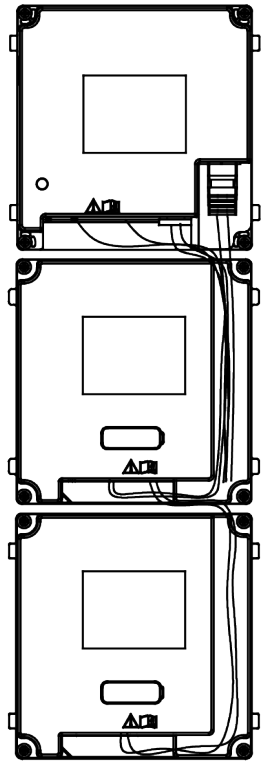

Figure 5-20 Line Connection Effect Picture

7. Insert the modules into the frame after wiring. The main unit must be placed in the top grid.

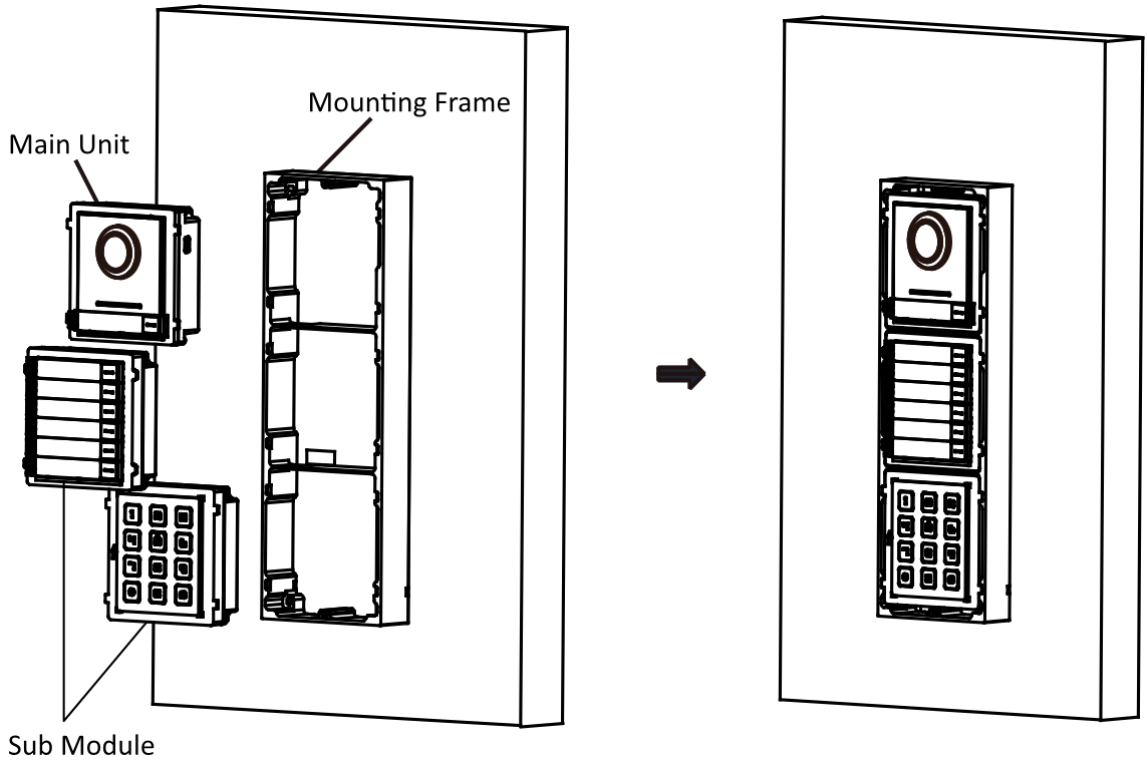

Figure 5-21 Insert the Modules into the Frame

8. Use the hexagon wrench in the package to fix the cover onto the frame.

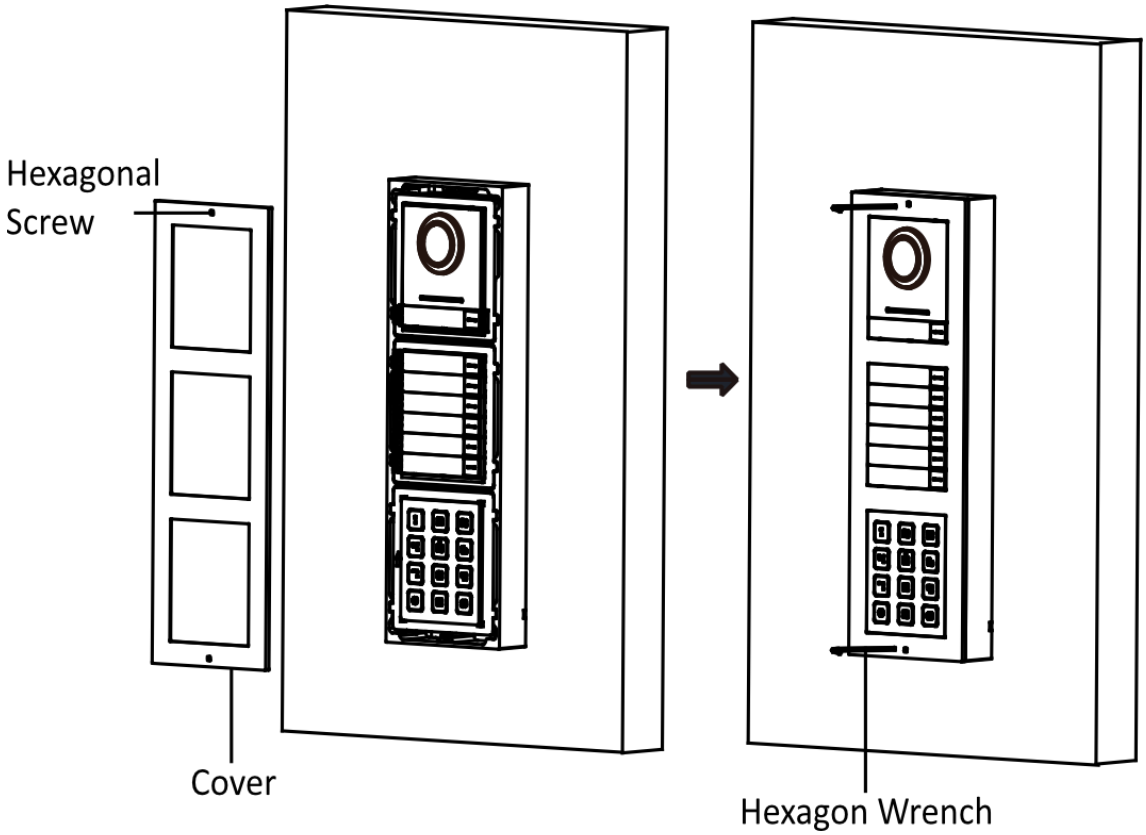

Figure 5-22 Fix the Cover

5.2.2 Three-Module Flush Mounting

Before You Start

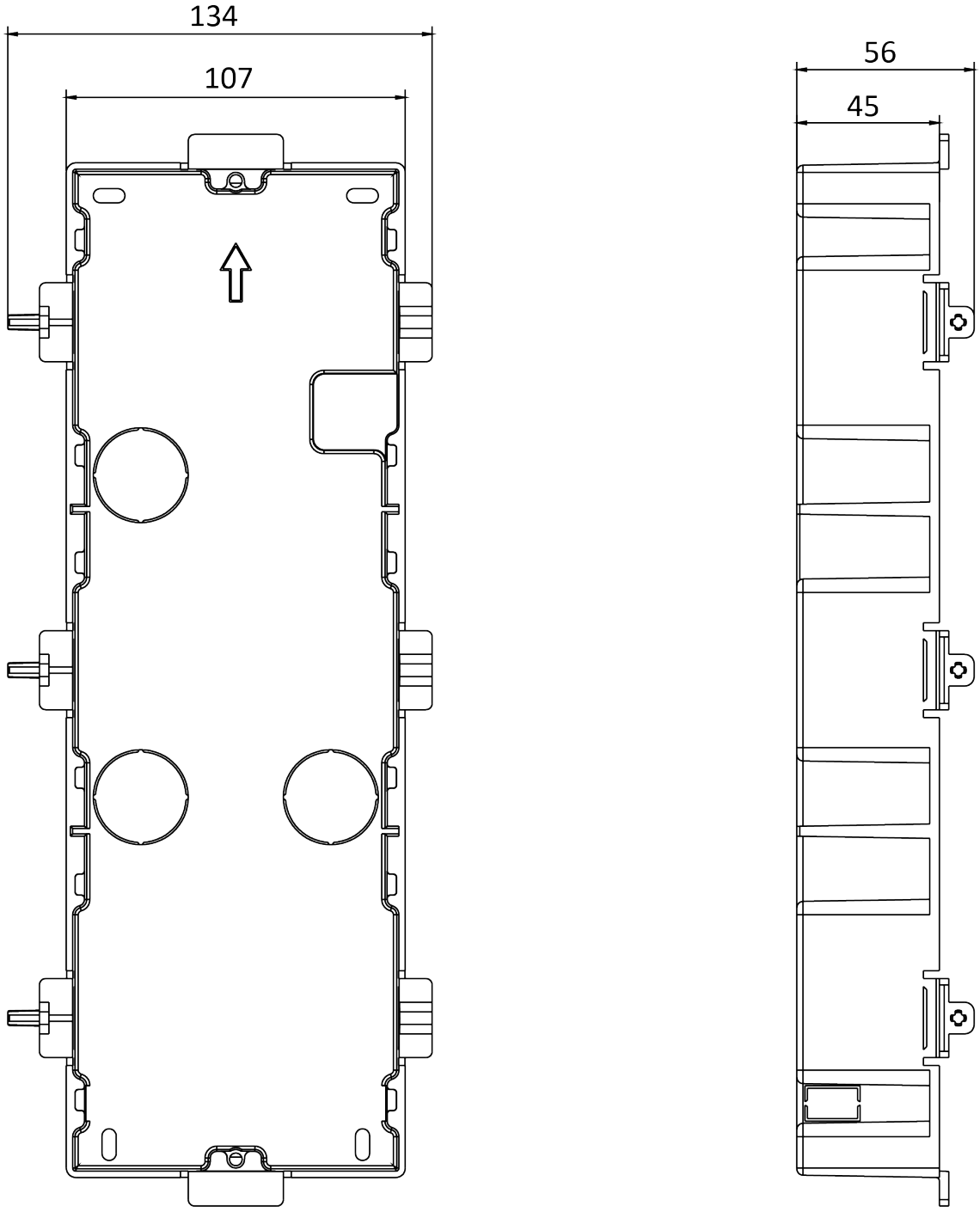

Figure 5-23 Gang Box

Note

- The dimension of one-module gang box is: 338.8(W)×134(H)×56(D) mm.
- The dimensions above are for reference only. The actual size can be slightly different from the theoretical dimension.

Steps

1. Cave the installation hole, and pull the cable out.The suggested dimension of installation hole is 321.8(W)×108(H)×45.5(D) mm. The suggested length of cables left outside is 270 mm.

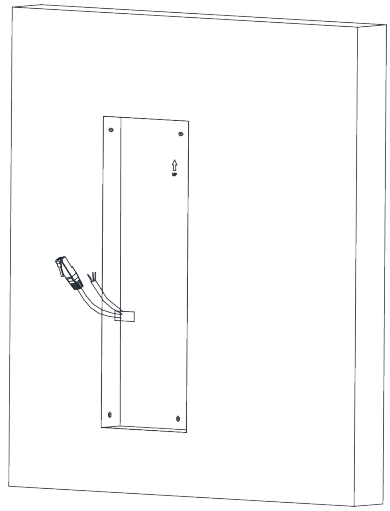

Figure 5-24 Cave the Installation Hole

2. Select a cable entry and remove the plastic sheet.
3. Mark the gang box screw holes on the wall.
   1) Route the cables through the gang box hole.
   2) Insert the gang box into the installation hole.
   3) Mark the gang box screw holes' position with a marker, and take out the gang box.

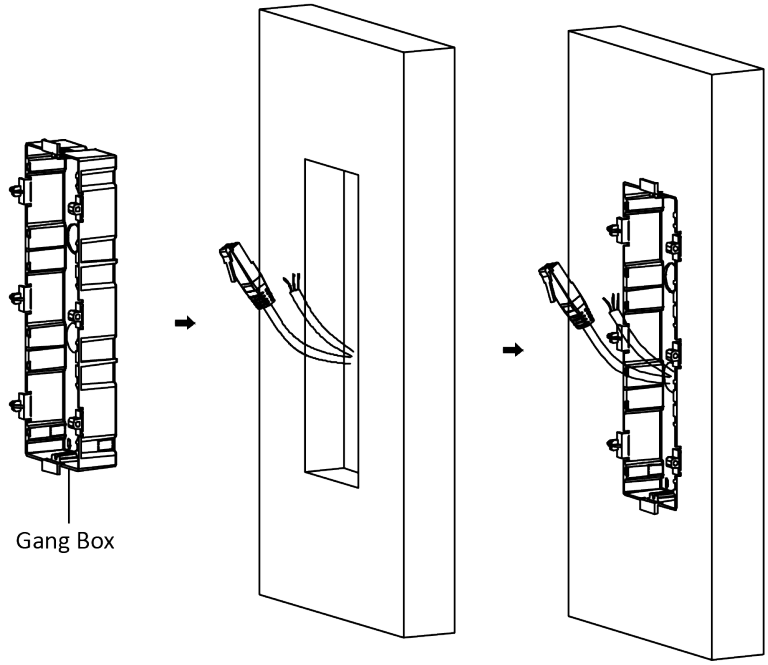

Figure 5-25 Mark the Screw Holes

4. Drill 4 holes according to marks on the wall, and insert the expansion sleeves into the screw holes. The suggested size of hole is 6 (diameter) × 45 (depth) mm.
5. Fix the gang box with 4 expansion bolts.

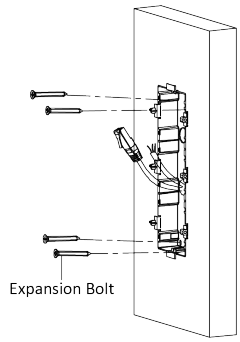

Figure 5-26 Fix the Gang Box

6. Fill the gap between the gang box and wall with concrete. Remove the mounting ears with tool after concrete is dry.

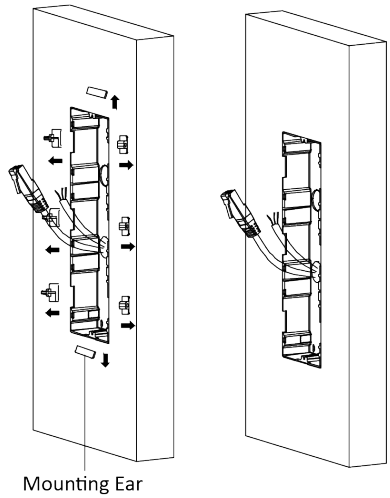

Figure 5-27 Remove the Mounting Ears

7. Connect cables and insert the modules.

1) Connect Cable 1 and one end of Cable 2 to the corresponding interfaces of the main unit, then insert the main unit into the upper grid.
2) Connect the other end of Cable 2 to the input interface of Sub Module 1. Connect one end of Cable 3 to the output interface of Sub Module 1 and insert it into the middle grid.
3) Connect the other end of Cable 3 to the input interface of Sub Module 2. Insert it into the bottom grid.

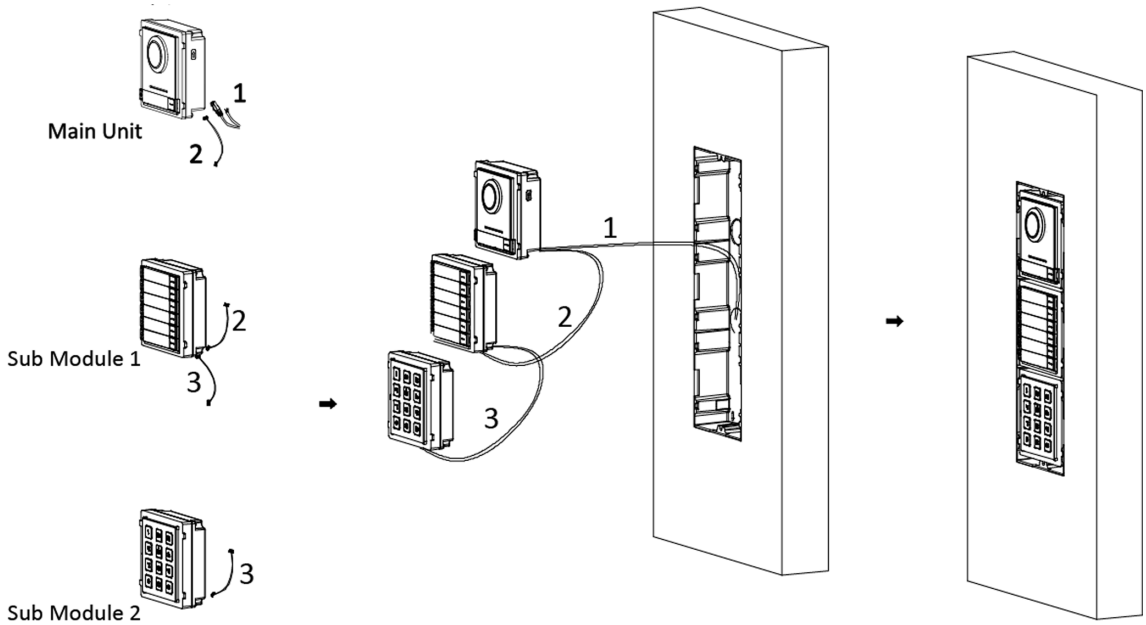

Figure 5-28 Connect Cables and Insert Modules

Note

Cable 1 refers to the cables pulled out from the wall that connected to the main unit. Cable 2 and Cable 3 refer to the module-connecting line in the accessory package.

8. Fix the cover and the main unit with 2 socket head cap screws by using a hexagon wrench (supplied).

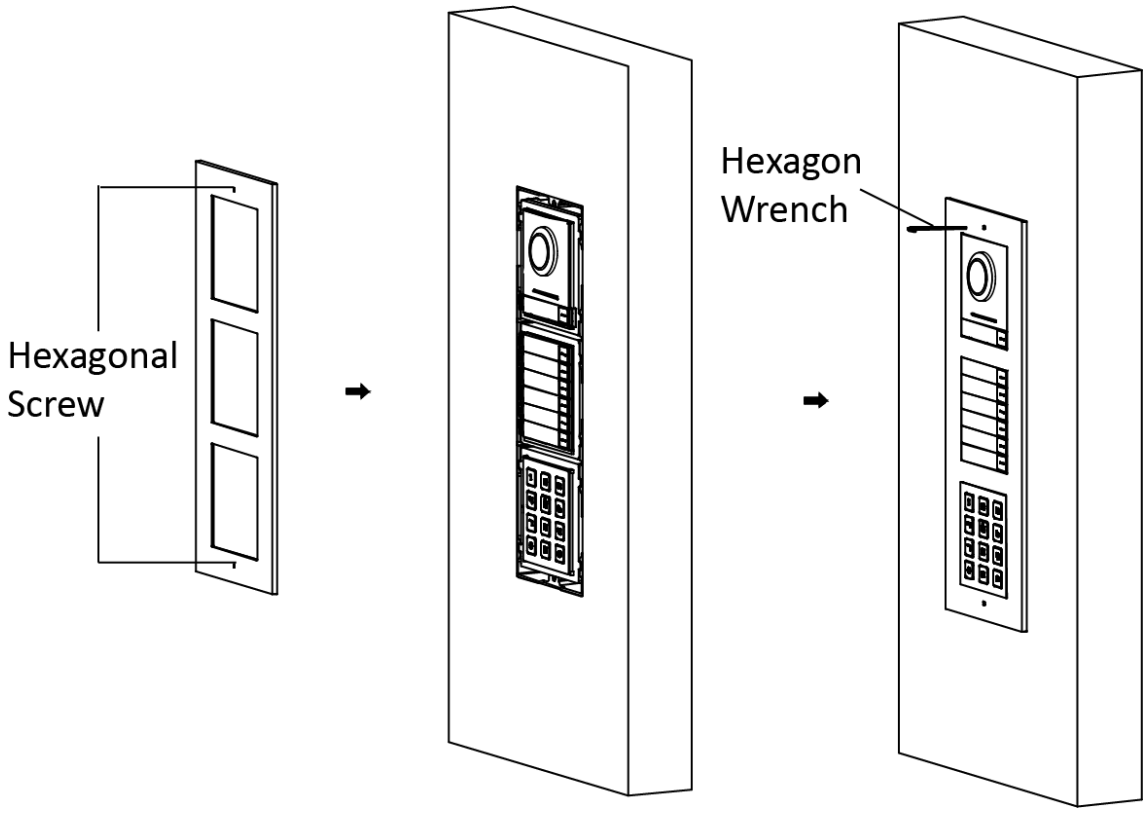

Figure 5-29 Fix the Cover

5.3 More-Than-Three Module Installation

5.3.1 More-than-Three Module Surface Mounting

Before You Start

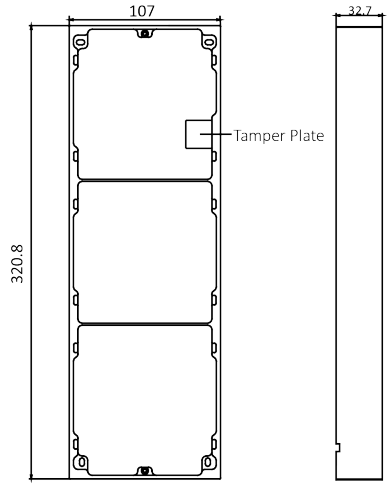

Figure 5-30 Mounting Frame

Note

- It takes two three-module mounting frames. The dimension of three-module mounting frame (W × H × D) is: 320.8 mm × 107 mm × 32.7 mm.
- The dimensions above are for reference only. The actual size can be slightly different from the theoretical dimension.

Steps

1. Paste two Sticker 1 onto the wall. Make sure the stickers are placed horizontally via measuring with the gradienter.
2. Drill 8 holes according to the screw holes on the sticker.

   Note

   - The suggested size of hole is 6 (diameter) × 25 (depth) mm.
   - The suggested length of cables left outside is 270 mm.

3. Pull out the cable through the cable hole of the left sticker.

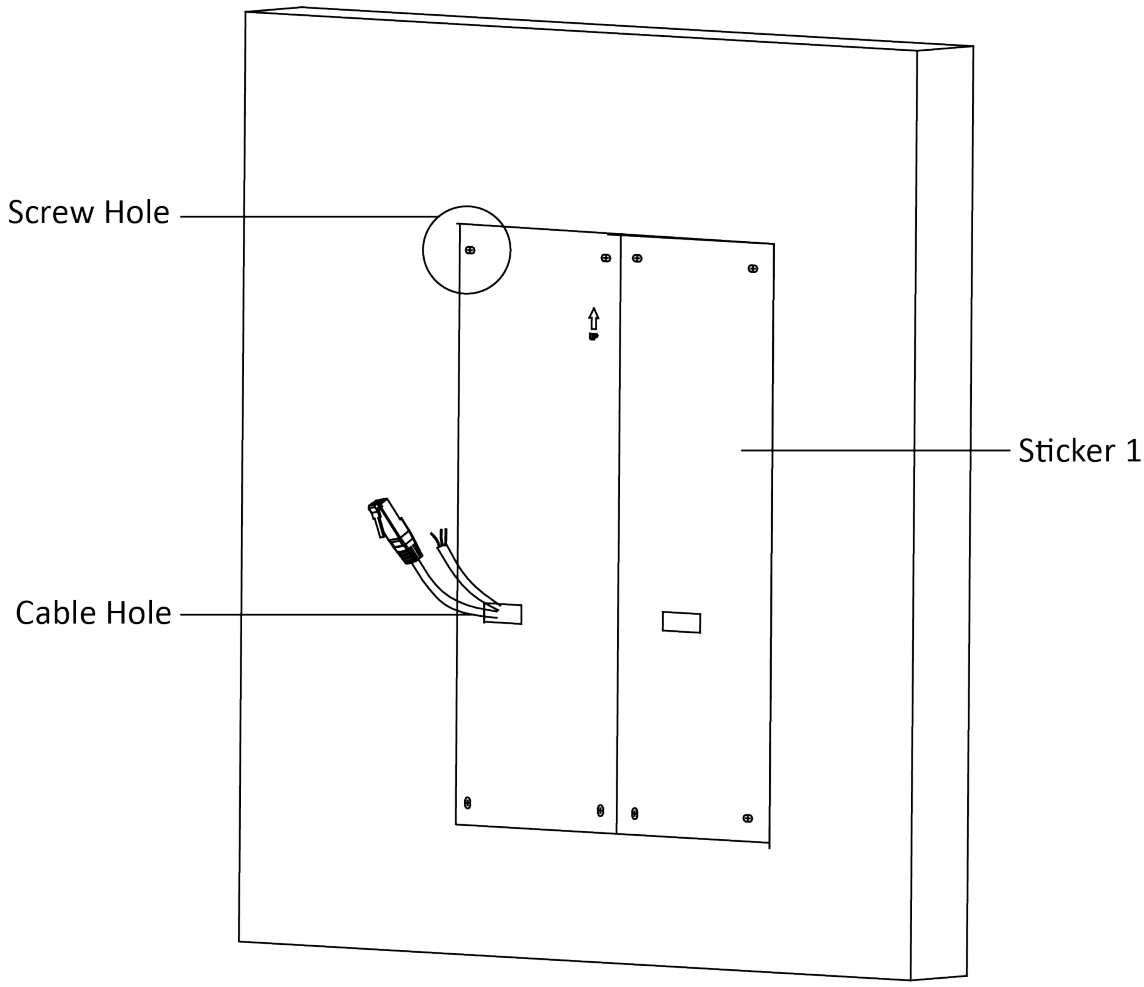

Figure 5-31 Drill Screw Holes

4. Remove the stickers and insert the expansion sleeves into the screw holes.
5. Thread the module-connecting line (400 mm) and grounding line across the thread hole of both frames.

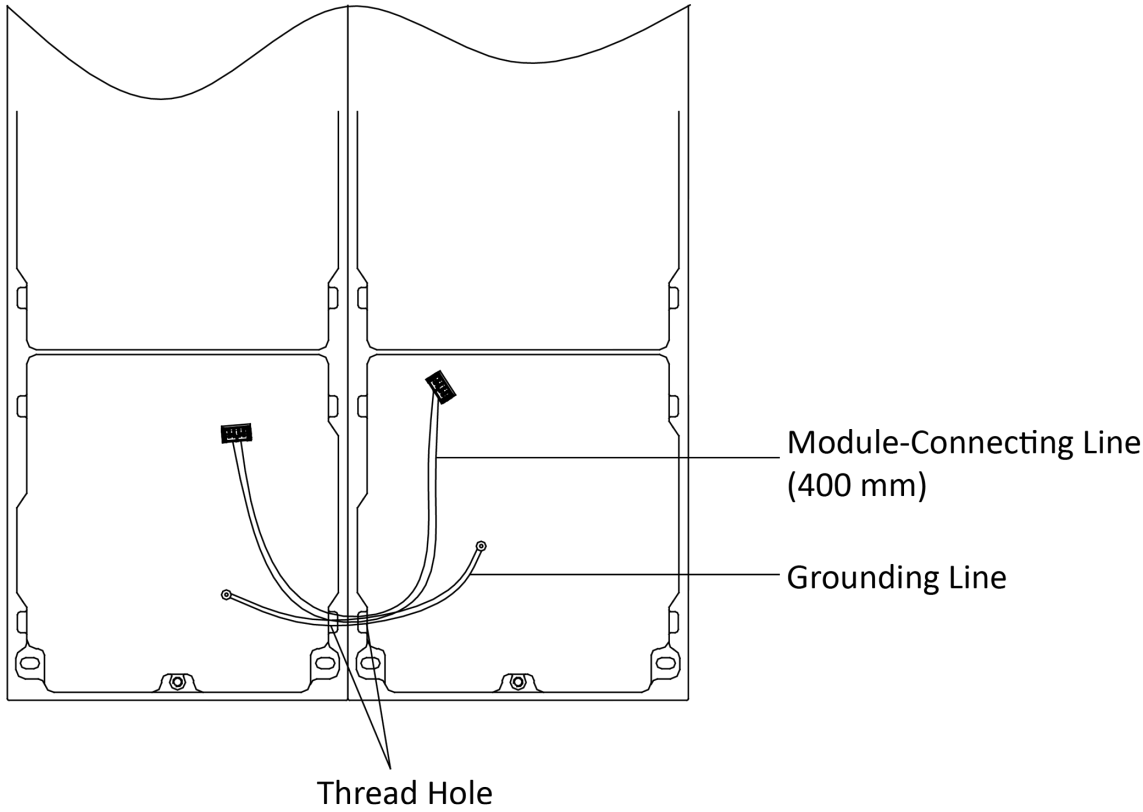

Figure 5-32 Place the Grounding Line and Module-Connecting Line

Note

- There are 6 module-connecting lines in the package: 190 mm × 4 and 400 mm × 2.
- Take the 400 mm module-connecting line for this step.
- The green-yellow line in the package is for grounding.

6. Fix the mounting frame onto the wall with 8 expansion bolts.

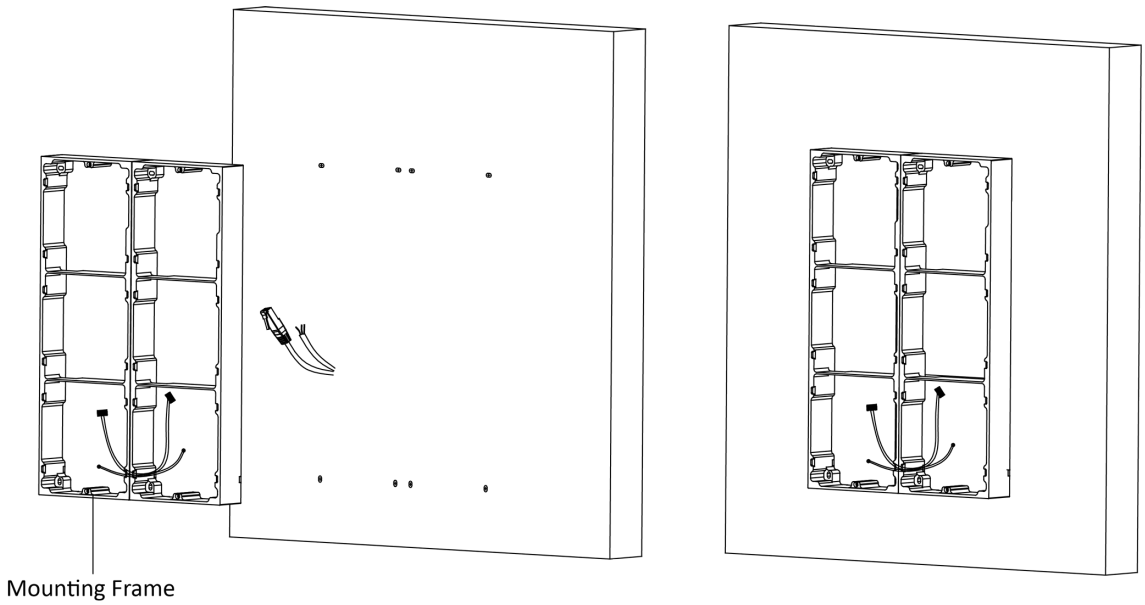

Figure 5-33 Fix the Mounting Frame

7. Pass the main unit connecting line across the thread hole to the top grid of the left frame. Thread the module-connecting line (190 mm) across the thread hole of the frame. The lines should be placed as shown below.

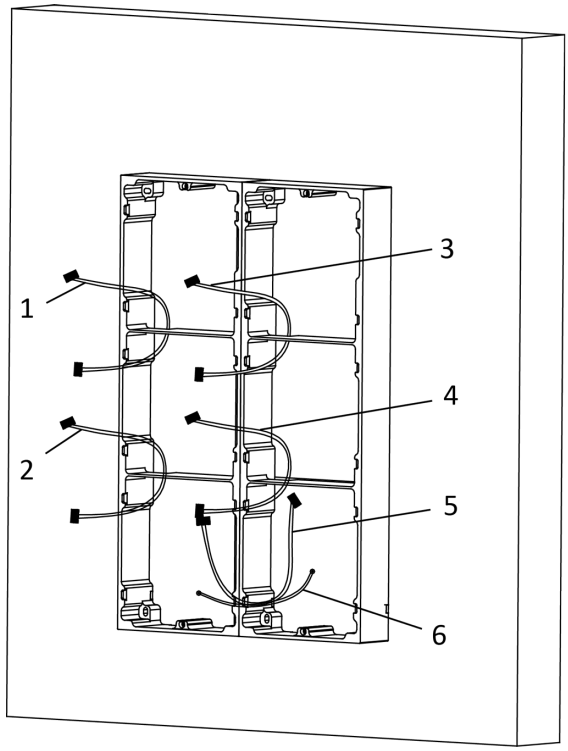

1,2,3,4 : module-connecting line (190 mm)
5 : module-connecting line (400 mm)
6 : module-connecting line (green-yellow)

Figure 5-34 Placement of Lines

8. Connect the cables.

1) Connect the cables from the wall and module-connecting line 1 to the corresponding interfaces of the main unit, then place the main unit into the upper grid.
2) Connect the other end of the module-connecting line 1 to the input interface of the sub module. Connect all sub modules via module-connecting lines.
3) Organize the cable with cable tie in the package. The suggested cable connection picture as shown below.

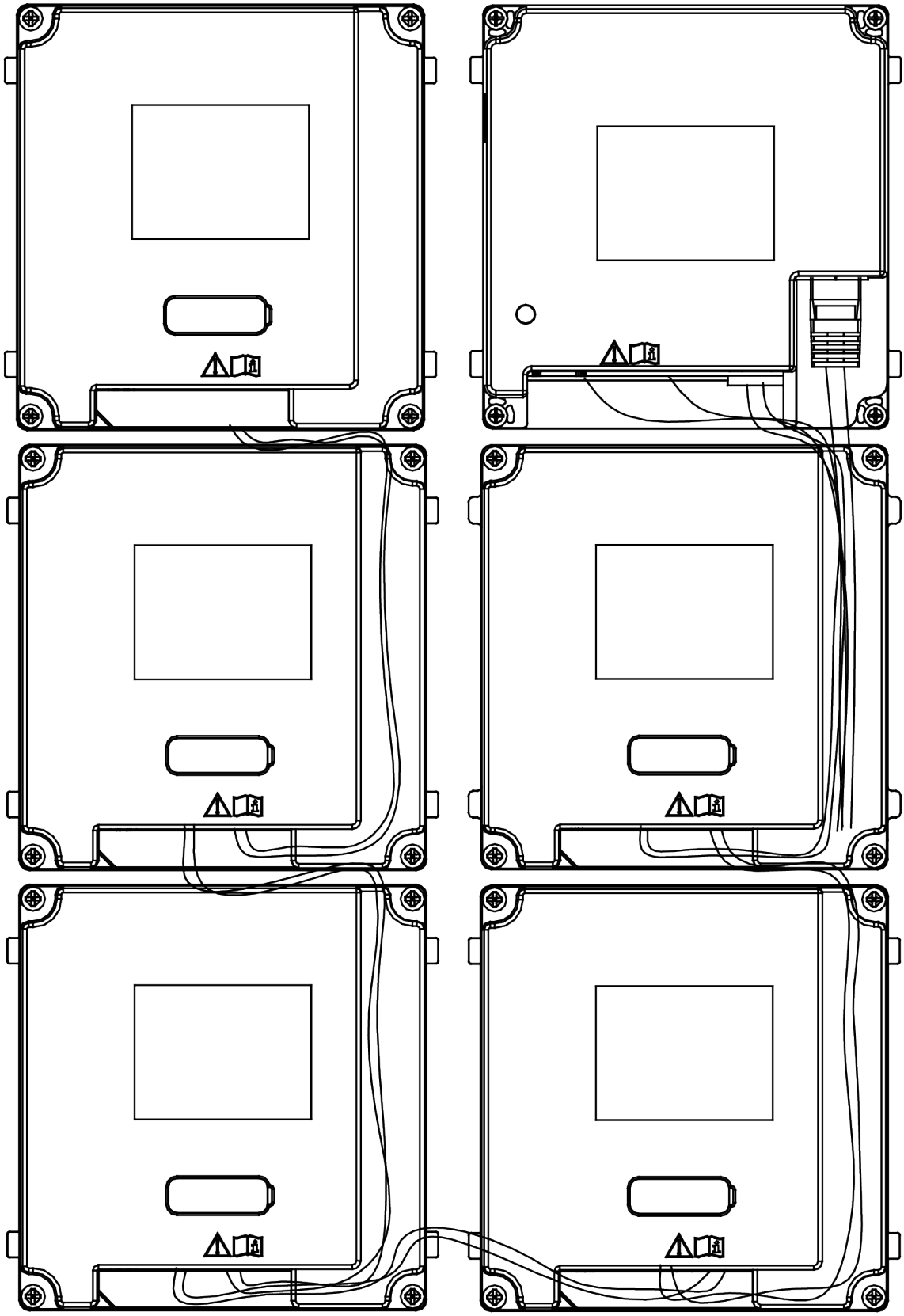

Figure 5-35 Line Connection Effect Picture

9. Insert the modules into the frame after wiring. The main unit must be placed in the top grid on the left.

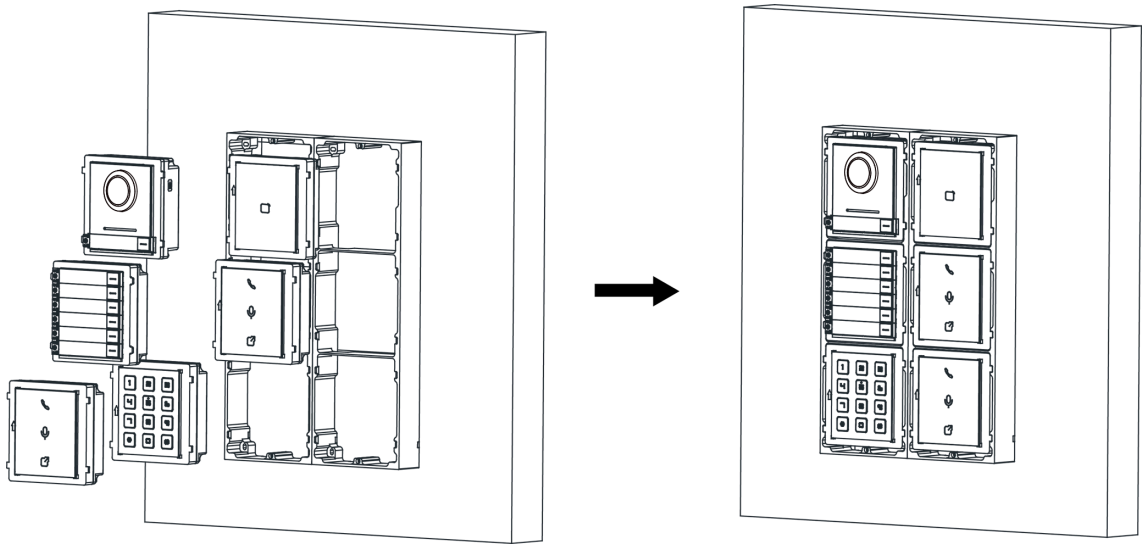

Figure 5-36 Insert the Modules

10. Pull the grounding line out and fixed its two end to the screw on the cover.

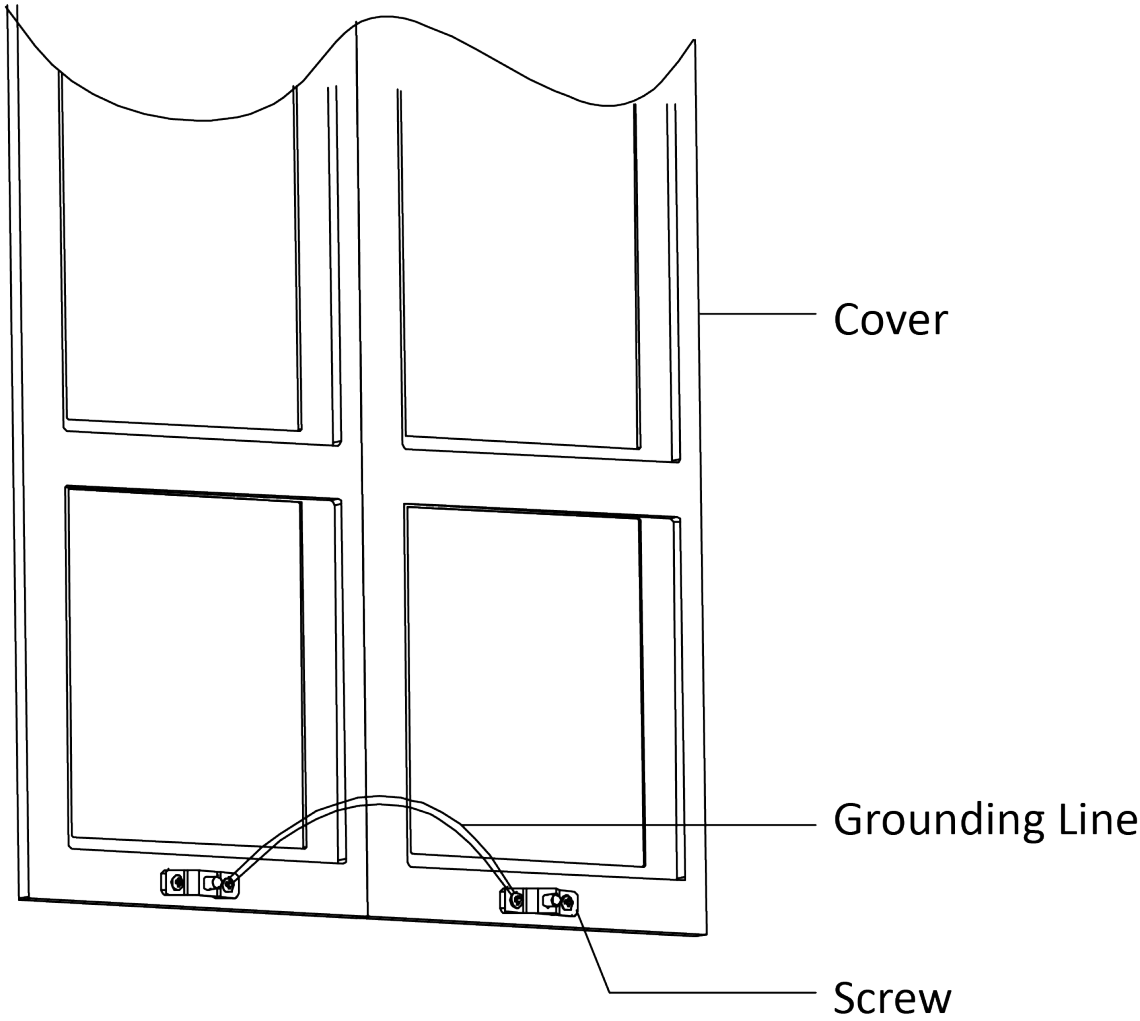

Figure 5-37 Connect the Grounding Line to the Cover

11. Use the hexagon wrench in the package to fix the cover onto the frame.

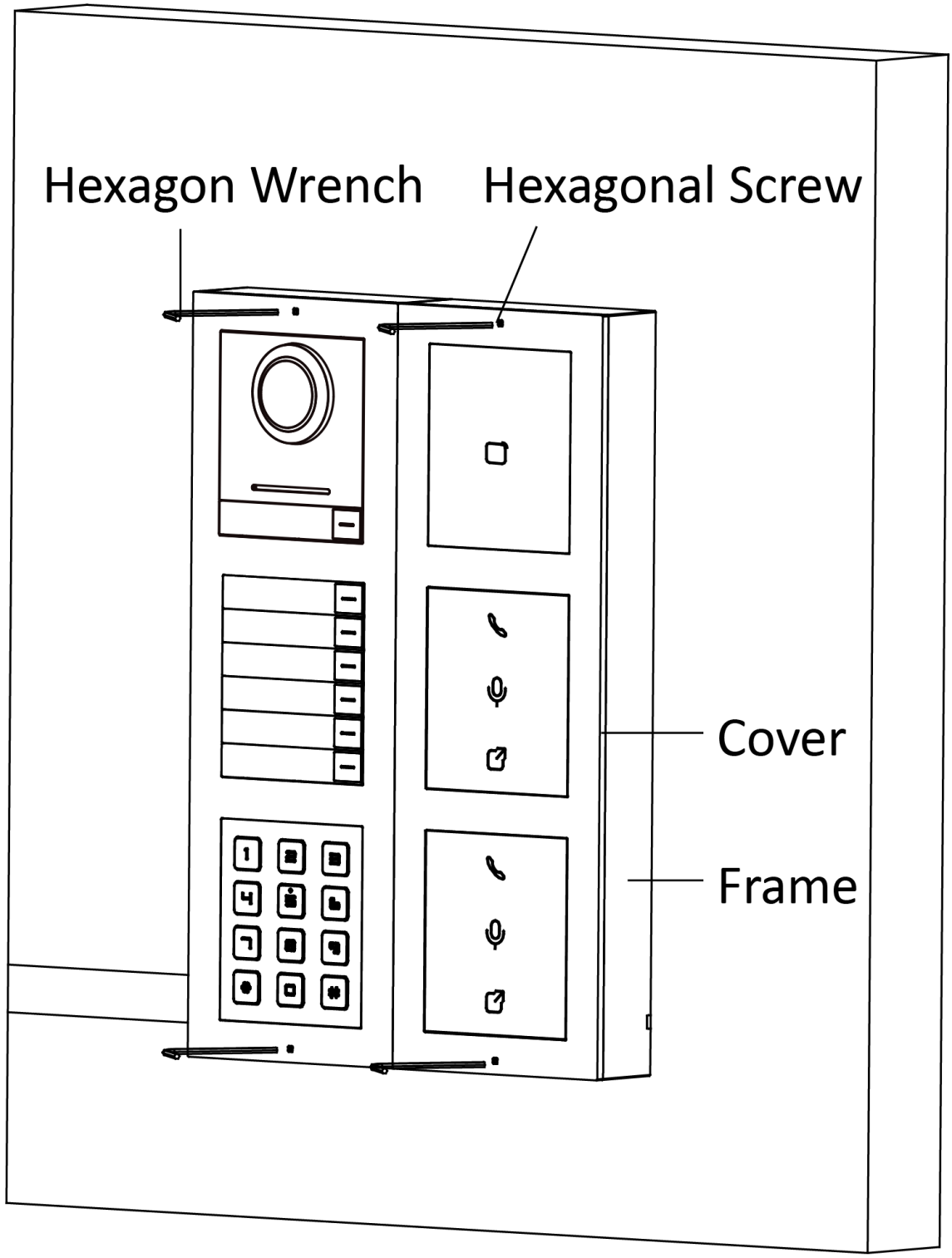

Figure 5-38 Fix the Cover

5.3.2 More-Than-Three Module Flush Mounting

Before You Start

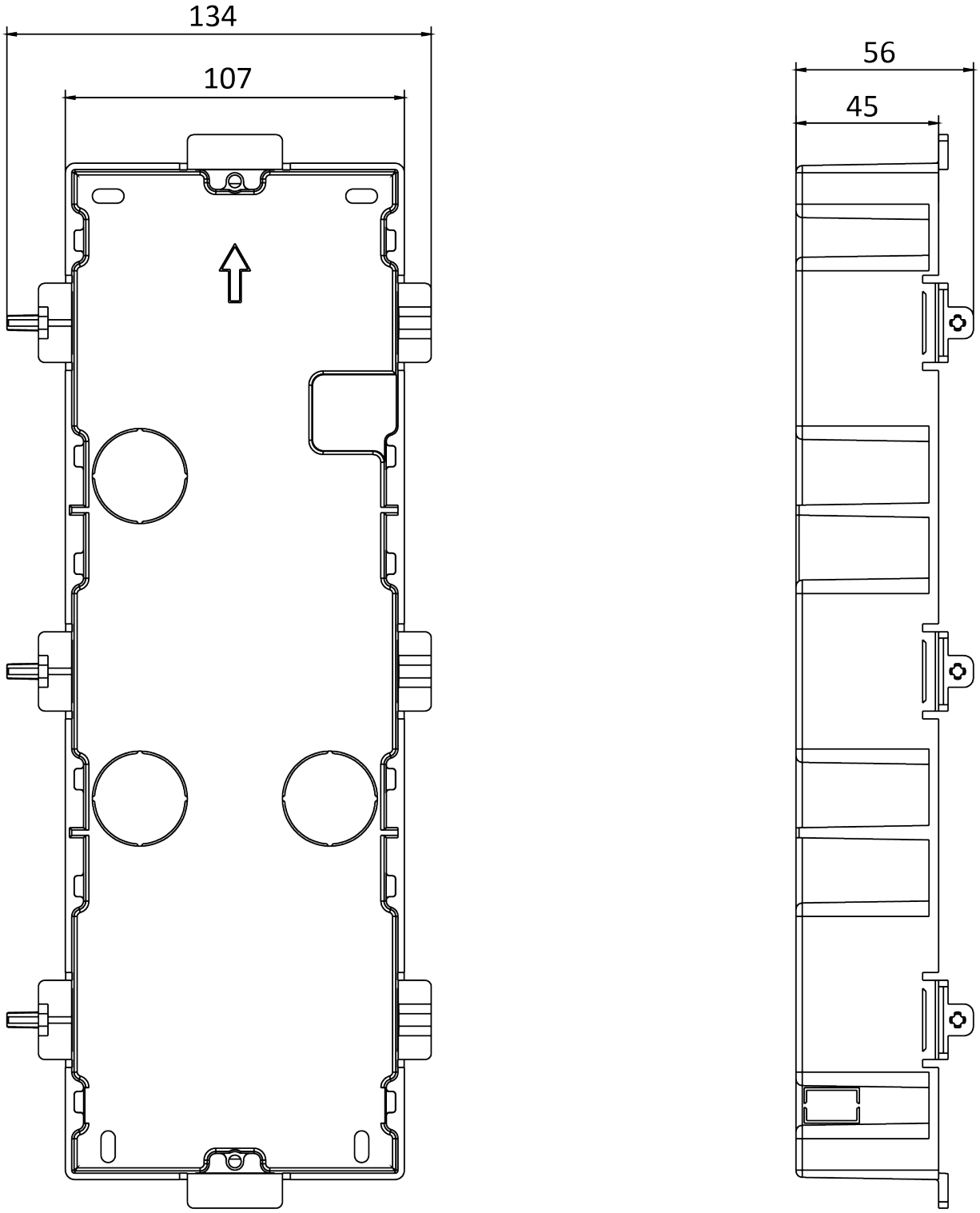

Figure 5-39 Gang Box

Note

It takes two three-module gang boxes. The dimension of the gang box is: 338.8 (W) × 134 (H) × 56 (D) mm. The dimension is for reference only.

Steps

1. Drill the installation hole, and pull the cable out.The suggested dimension of installation hole is 321.8 (W) × 315 (H) × 45.5 (D) mm. The suggested length of cables left outside is 270 mm.

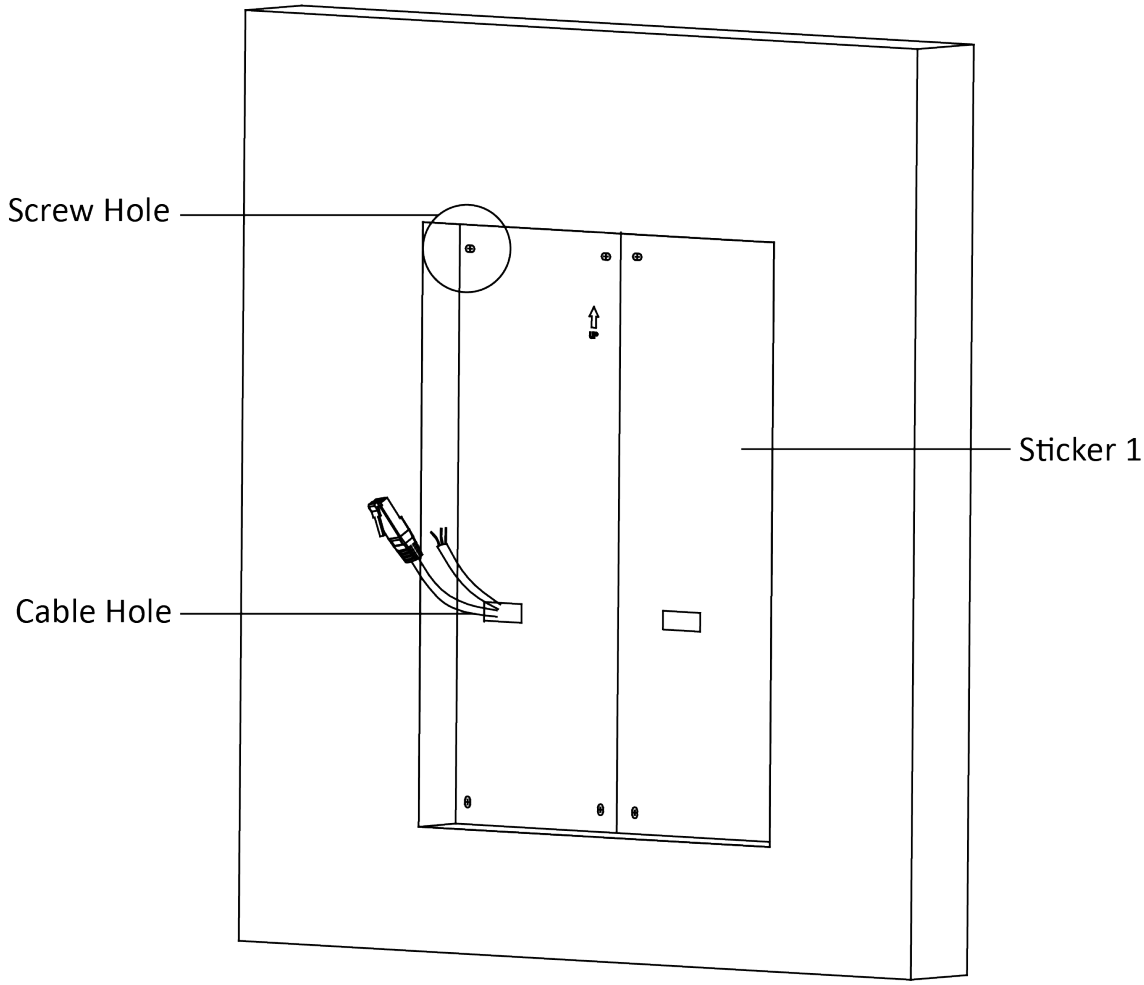

Figure 5-40 Cave the Installation Hole

2. Connect two gang boxes as below.

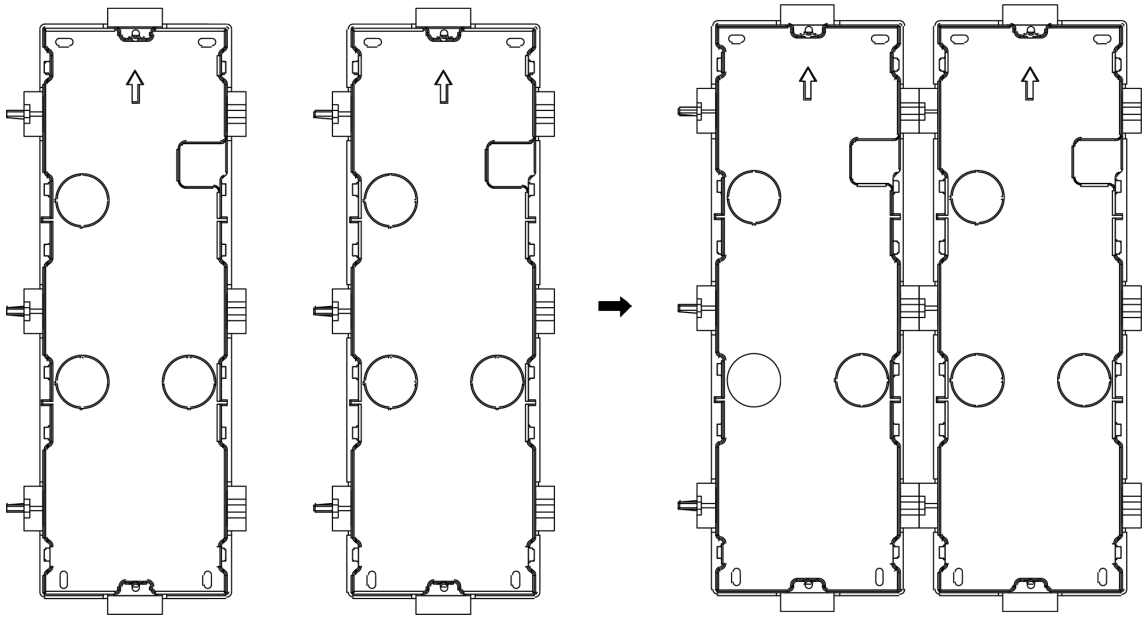

Figure 5-41 Connect Two Gang Boxes

3. Select a cable entry and remove the plastic sheet.

4. Remove the plastic sheets on the side of the gang boxes (shown as 1 and 2) below:

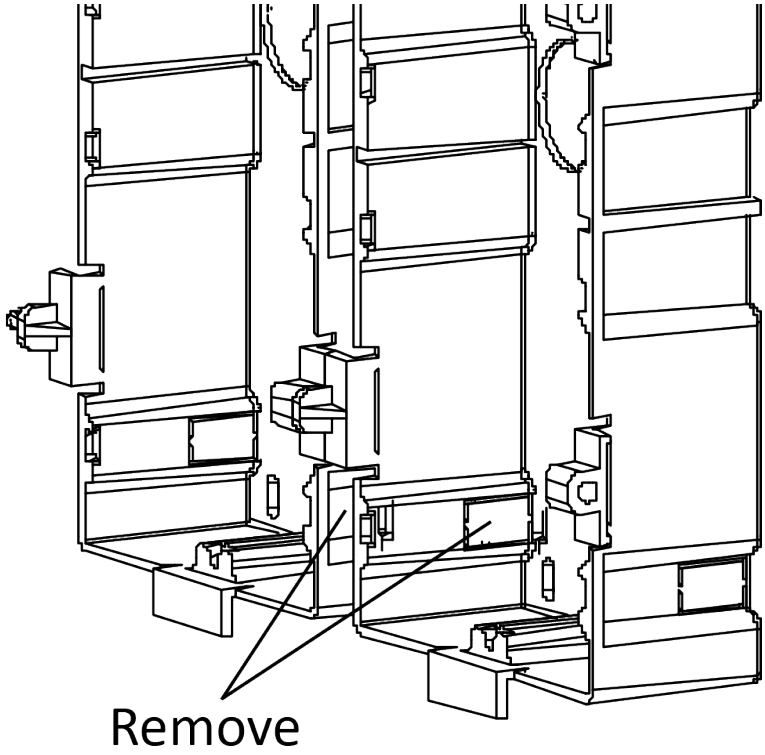

Figure 5-42 Remove the Plastic Sheets

5. Mark the gang box screw holes on the wall.
1) Route the cables through the gang box hole.
2) Insert the gang box into the installation hole.
3) Mark the gang box screw holes' position with a marker, and take out the gang box.

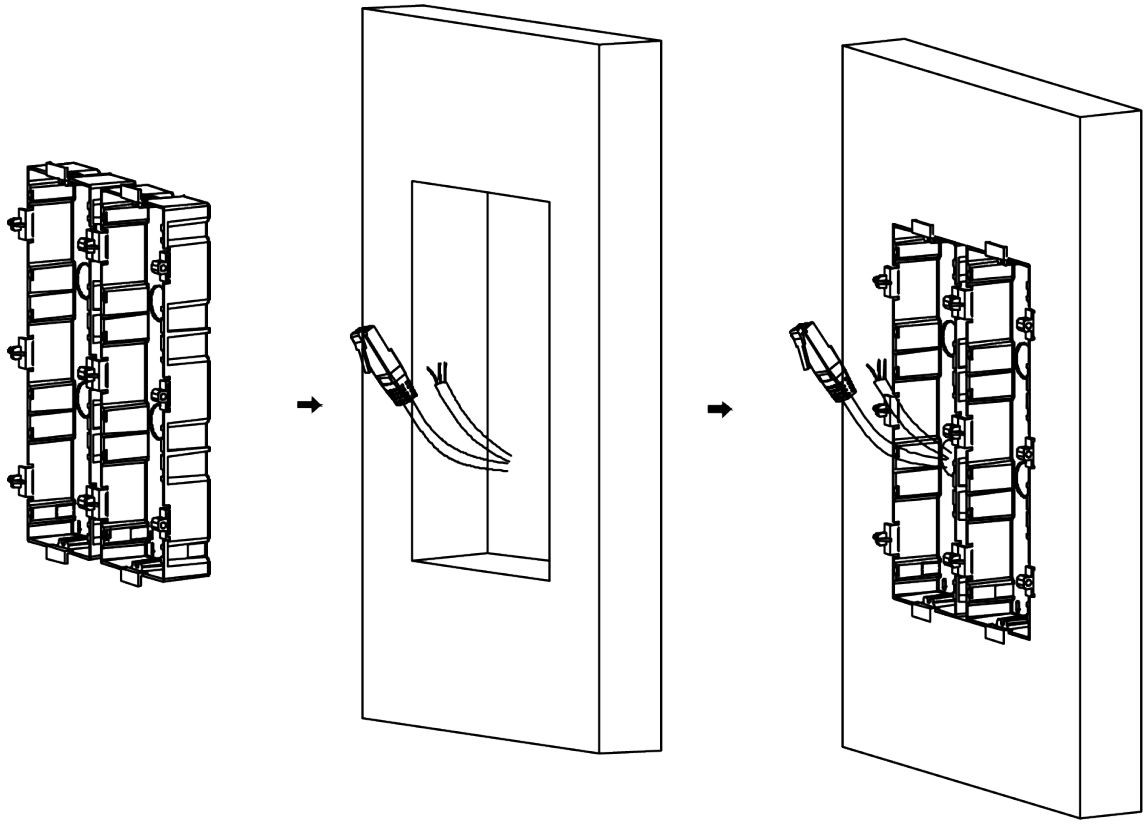

Figure 5-43 Mark the Screw Holes

6. Drill 8 holes according to the marks on the wall, and insert the expansion sleeves into the screw holes. The suggested size of hole is 6 (diameter) × 45 (depth) mm.

7. Fix the gang boxes with 8 expansion bolts.

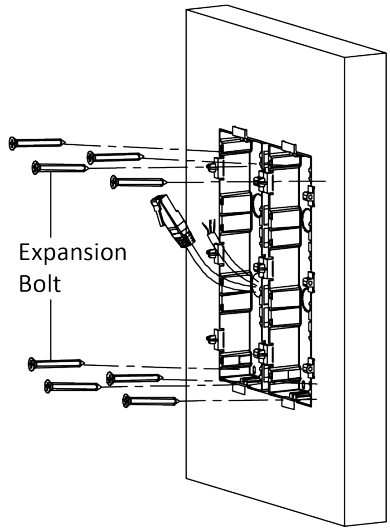

Figure 5-44 Fix the Gang Boxes

8. Fill the gap between the gang box and wall with concrete. Remove the mounting ears with tool after concrete is dry. Route the grounding line through the cable entries.

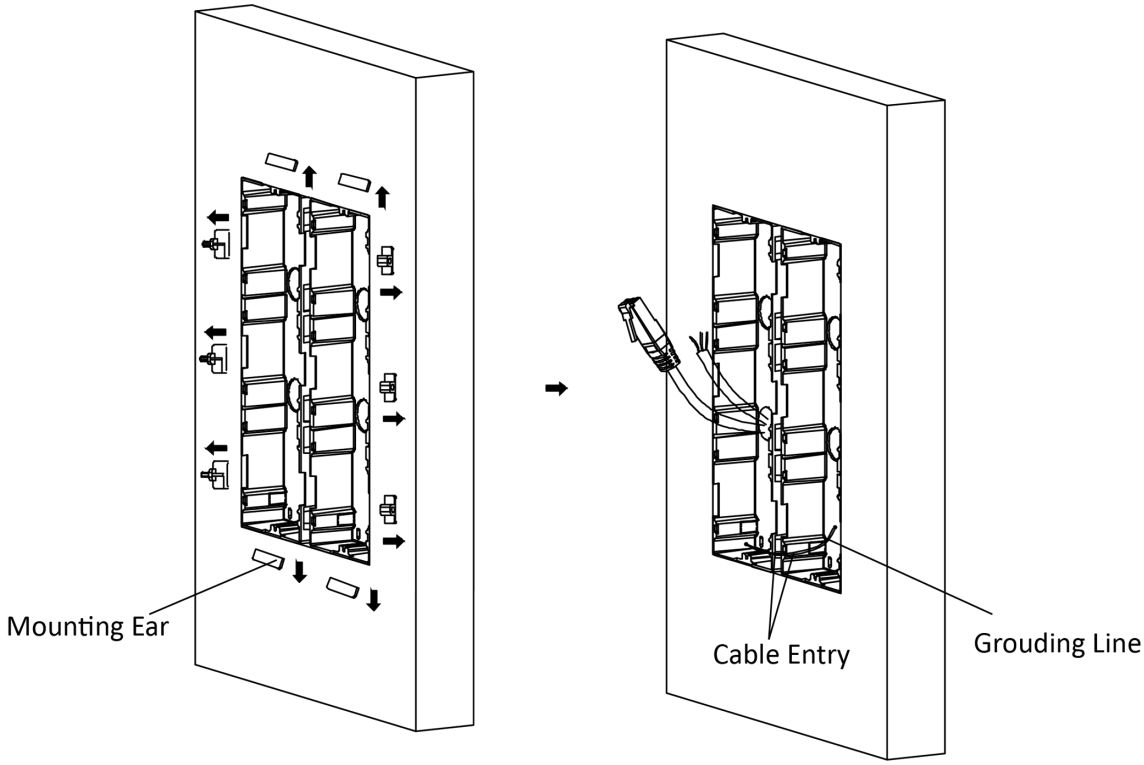

Figure 5-45 Remove the Mounting Ears

Note

The green-yellow line in the package is for grounding.

9. Connect cables and insert the modules.

1) Connect Cable 1 and one end of Cable 2 to the corresponding interfaces of the Main Unit, then place the Main Unit into the upper grid of the left gang box.
2) Connect the other end of Cable 2 to the input interface of Sub Module 1. Connect one end of Cable 3 to the output interface of Sub Module 1 and insert it into the middle grid of the left gang box.
3) Finish the wiring and inserting according to the cable number and the position shown as below.

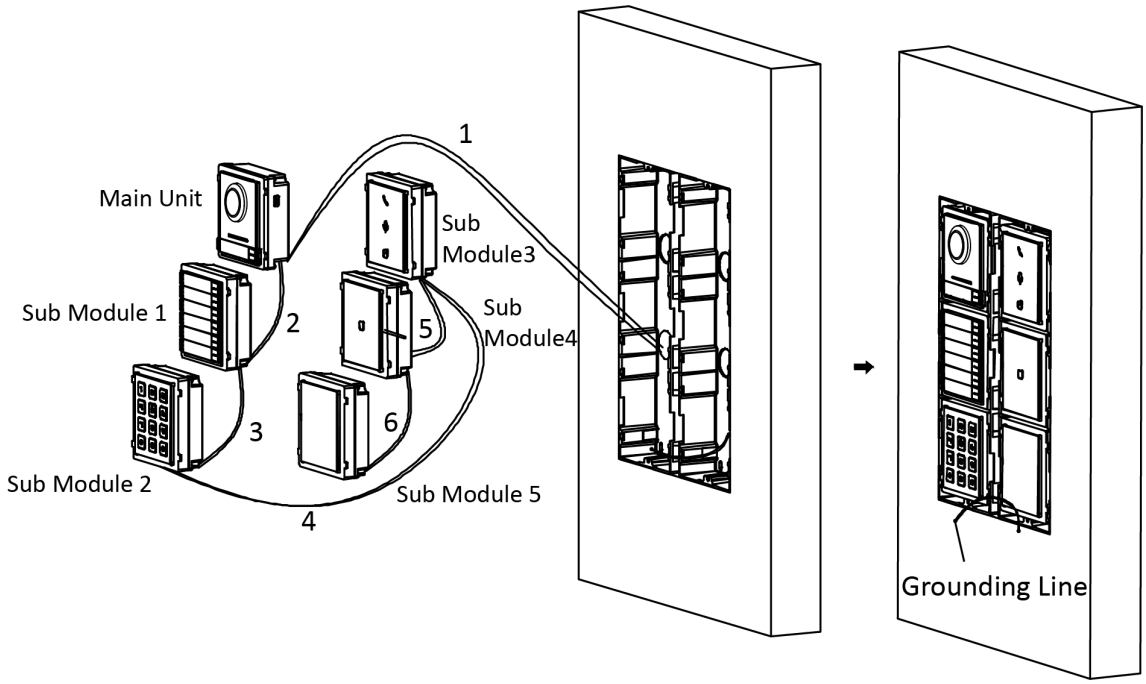

Figure 5-46 Install Mounting Frame

The cables connect to each module shown as below.

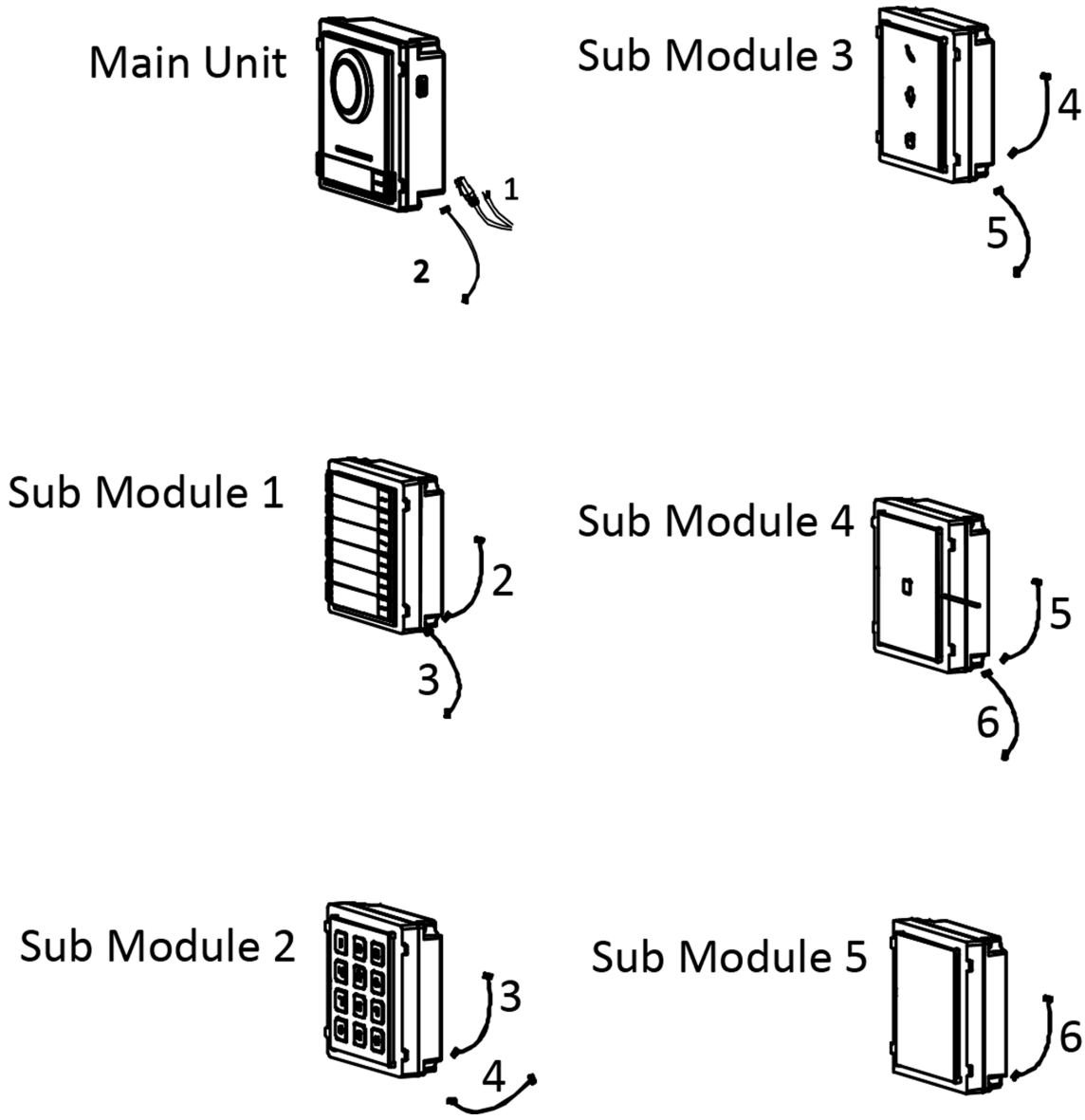

Figure 5-47 Cables Connection

Note

- Cable 2,3,5 and 6 are the module-connecting lines (190 mm) in the package.
- Cable 4 is the module-connecting line (400 mm) in the package.
- Main unit must be put in the top grid.

10. Pull the grounding line out and fixed its two end to the screw on the cover.

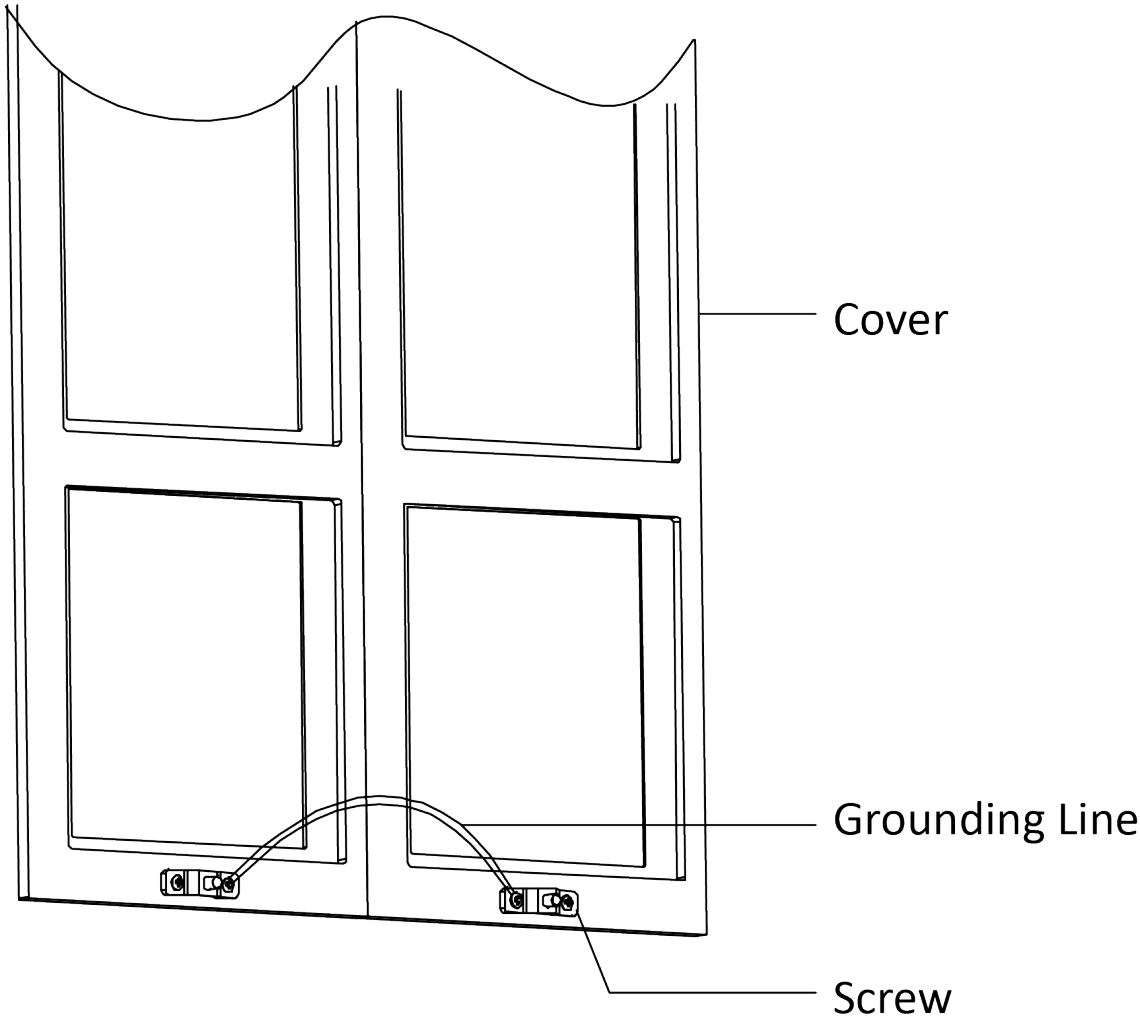

Figure 5-48 Connect the Grounding Line to the Cover

11. Fix the cover with 2 socket head cap screws by using a hexagon wrench (supplied).

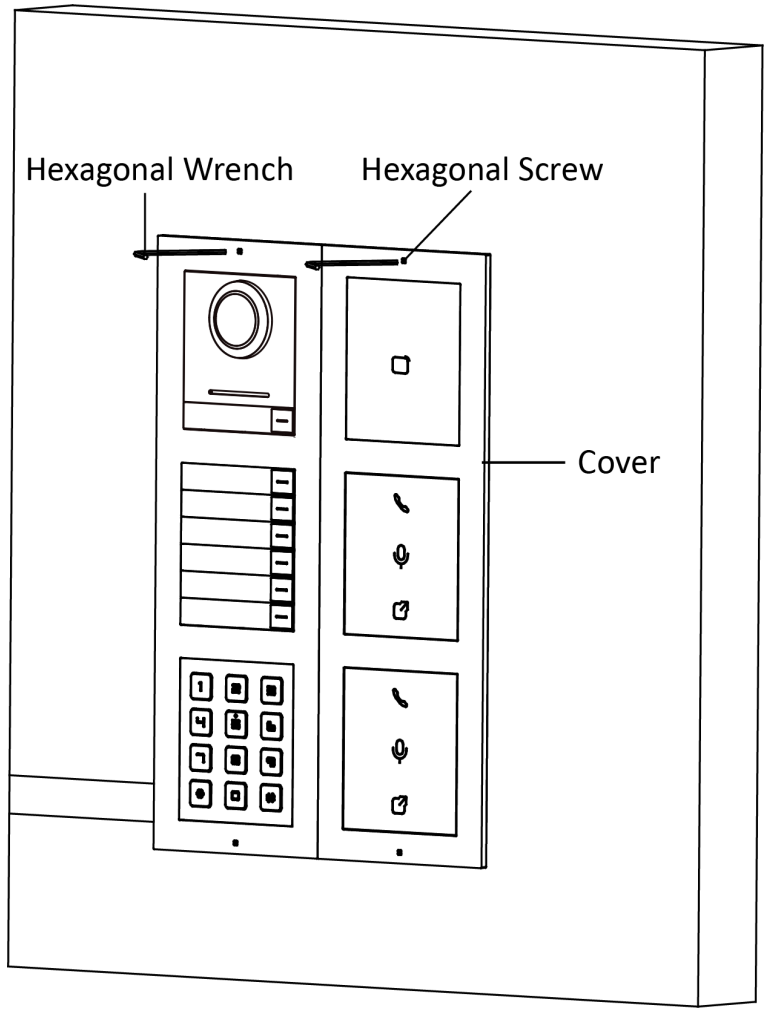

Figure 5-49 Fix the Cover

Chapter 6 Local Operation

6.1 Call Resident

Note

- Make sure the sub module has connected with the main unit.
- Make sure you have add contacts to the device.
- You can select Dial-Up/ Press Button to Call/ Contacts/ Swipe Card Interface as the Home Page. For more details, please refer to ***Sub Module Configuration*** (web 4.0) or ***Sub Module Configuration*** (web 5.0) .

Call Resident via Touch-Screen Module

- 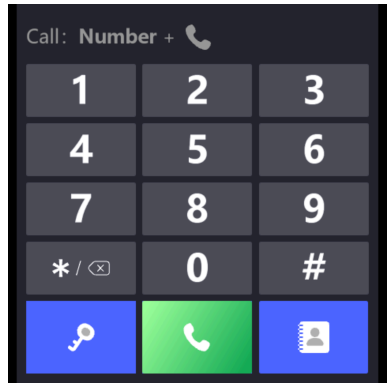

Figure 6-1 Dial-Up

If you select **Dial-Up** interface as home page, enter the calling number and tap to call. Or you can tap to enter the contacts page and select the resident to call.

-

Figure 6-2 Contacts

Note

The navigation bar on the right side of the contact page is only available for devices using English.

- If you select **Contacts** or **Press Button to Call** interface as home page, select a resident to call or tap to enter the dial-up page where you can enter the calling number and tap to call.

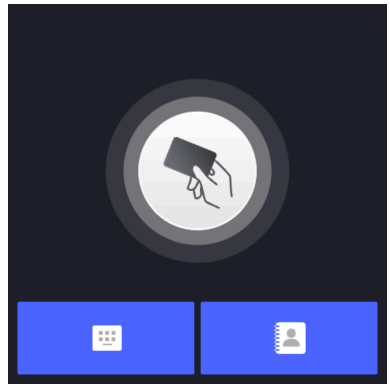

Figure 6-3 Swipe Card

If you select **Swipe Card** interface as home page, tap to enter the dial-up page where you can enter the calling number and tap to call. Or you can tap to enter the contacts page and select the resident to call.

Note

- You can select default home page for touch-screen module via the web client of the main unit. For more details, please refer to: ***Sub Module Configuration***
- The main unit supports the connection with doorbells. If the doorbell is connected, when calling indoor stations, the doorbell will ring simultaneously.

6.2 Issue Card

You can issue card via main card or via Web client of the main unit.

Issue Card via Main Card

1. Swipe the main card on the card reading area, and hear two beeps.
2. Swipe the unauthorized sub cards in turn after hearing a beep.
3. Swipe the main card again to end the card issuing process.

Issue Card via Web Client

For more information about adding card via Web client please refer to:

- Web 4.0: ***Person Management***
- Web 5.0 (PC Web): ***Person Management on PC Web***
- Web 5.0 (Mobile Web): ***Person Management on Mobile Web***

6.3 Unlock Door

Unlock Door by Password

Enter the password via touch-screen module to unlock the door.

Note

You can select Dial-Up/ Press Button to Call/ Contacts/ Swipe Card Interface as the Home Page. For more details, please refer to ***Sub Module Configuration*** (web 4.0) or ***Sub Module Configuration*** (web 5.0) .

- If you select **Dial-Up** interface as home page, tap to enter the unlock page.
- If you select **Contacts**, **Press Button to Call** or **Swipe Card** interface as home page, tap → to enter the unlock page.

Enter **# + Pin Code** and tap **OK** to unlock the door.

Note

- Password should be 4 to 6 digits.
- You're allowed to set 3 public passwords via web client. For more details, please refer to: ***Set Public Password***
- The password varies according to different rooms.

Unlock Door by Card

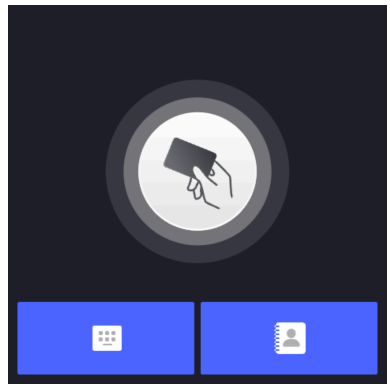

Figure 6-4 Swipe Card

Note

- Make sure the card has been issued. You can issue the card via the module door station, or via web client. For more information about issuing card, please refer to: ***Issue Card*** .

Present the card on the card reading area to unlock the door.

Note

The main card does not support unlocking the door.

Chapter 7 Configuration and Operation

You can configure the nametag module via the Web Client and Client Software of the main unit.

7.1 Configuration via Web Client of the Main Unit

7.1.1 Configuration via Web 4.0

Login Web Browser

You can log into the Web browser for device configuration.

Steps

1. Enter the device IP address in the address bar of the web browser and press **Enter** to enter the login page.
2. Enter the device user name and the password. Click **Login** to login to the page.

Forgot Password

If you forget the device password, you can change the device password via security questions or reserved E-mail address.

Steps

Note

You can change the device password via PC web.

1. Click**Forgot Password** on the login page.
2. Select the verification method.
   - Answer the reserved security questions.

     Note

     The answers are configured when you first activate the device.
   - Enter the reserved E-mail address.
3. Create a new password and confirm the password.
4. Click **Next** to save the settings.

Person Management

Click and add the person's information, including the basic information, authentication mode and credentials. And you can also edit user information, view user picture and search user information in the user list.

Click **User → Add** to enter the page of **Add User**.

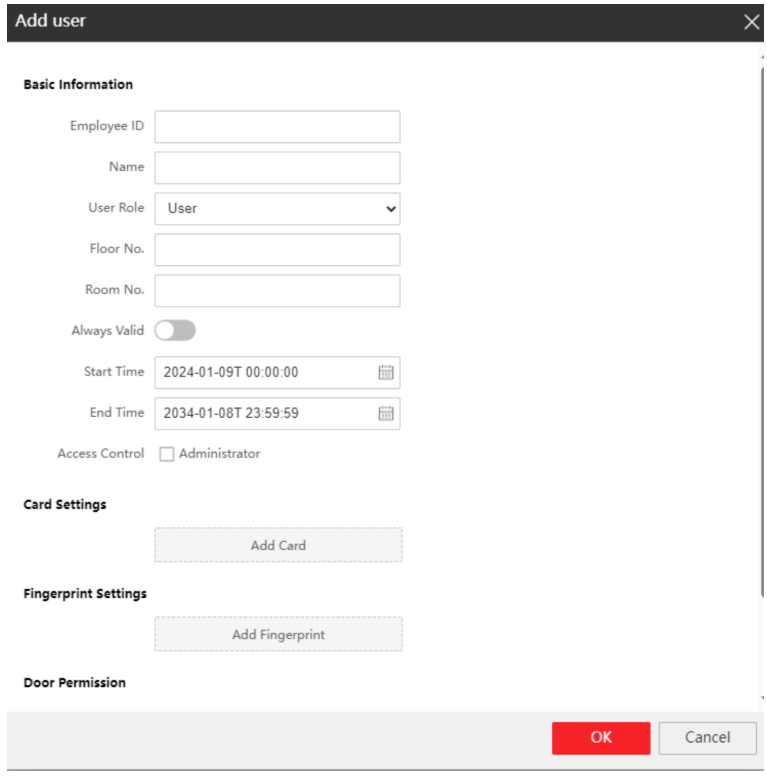

Figure 7-1 Add User

Add Basic Information

Add the person's basic information, including **Employee ID**, **Name**, **Floor No.** and **Room No.** . You also need to select the **User Role**.

Click **OK** to save the settings.

Set Permission Time

Set **Start Time** and **End Time** and the person can only have the permission within the configured time period. If you enable **Always Valid**, then the user can have the permanent permission and you do not need to set **Start Time** and **End Time**.

Click **OK** to save the settings.

Note

You can check **Administrator** to set the user as the Administrator.

Add Card

Click **Add Card**, enter the **Card No.** or click **Read** to read card No. from the card reader module. Select **Property**, and click **OK** to add the card.
Click **OK** to save the settings.

Add Fingerprint

Click **Add Fingerprint**, and press your finger on the fingerprint module to add your fingerprint. Click **Complete** to save the settings.

Set Card Security

Click **Configuration → General → Card Security** to enter the settings page.

You can check to enable DESFire card and click to enable DESFire Card Read Content. Click **Save** to save the settings.

Enable DESFire Card

The device can read the data from DESFire card when enabling the DESFire card function.

DESFire Card Read Content

After enable the DESFire card content reading function, the device can read the DESFire card No.

Sub Module Configuration

Steps

1. Click **Configuration → Intercom → Sub Module Configuration** to enter the page.
2. Click ⚙ to edit the sub module.
   1) Slide to adjust **Screen Backlight** brightness.
   2) Slide **Enable buzzer** to enable the function.
   3) Select **Default Home Page** which will be displayed on the touch-display module.
   4) Select **Theme** as light or dark mode which will be applied to the touch-screen module.

   Note

   The module address is used to differentiate the sub modules. See *Configure Sub Module Address* for detailed configuration instructions.

Notice Publication

You can set the notice publication for the device.

Click **Configuration → Theme → Notice Publication** .

Theme Management

Click **Media Library Management → +** to upload the picture from the local PC.

Note

- Up to 5 pictures can be uploaded. Each of the pictures should be less than 10 MB.
- The supported picture formats are jpg, jpeg, png and bmp.
- We recommend keeping the aspect ratio of the image/video the same as that of the screen, otherwise it will automatically stretch to fill the screen.

Click **+**, and set **Name** to create a theme. After creating the theme, click **+** in the **Theme Management** panel to select pictures from the media library. Click **OK** to add pictures to the theme.

Schedule Management

After creating a theme, you can select the theme and draw a schedule on the time line.

Select the drawn schedule, and you can edit the exact start and end time.

Select the drawn schedule and you can click **Clear** or **Clear All** to delete the schedule.

Slide Show Interval

Enter a number to set the slide show interval. The picture will be changed according to the interval.

Set Public Password

Set public password.

Click **Configuration → Access Control → Password Settings** to enter the page.

Click **Add** to add public password.

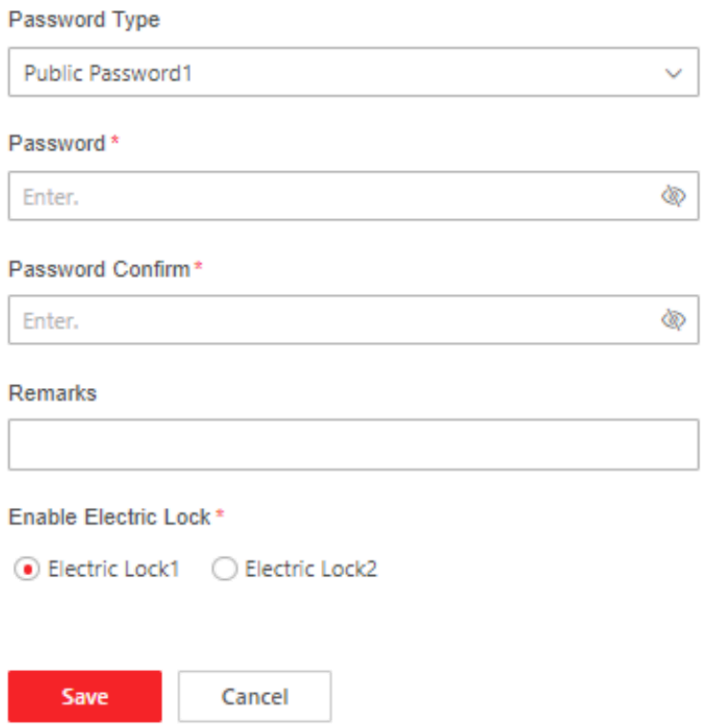

Figure 7-2 Add Public Password

Select password type.

Enter and confirm the password.

Enter remarks.

Select electric lock.

Click **Save** to save the settings.

7.1.2 Configuration via PC Web 5.0 or Mobile Web

Login Web Browser

You can log into the Web browser for device configuration.

Steps

1. Connect your mobile devices or PCs to the device hotspot.
2. Enter the device user name and the activation password. Click **Login**.

Note

The device will be activated automatically after powered on. You can check the activation password via the label on the surface of the device.

3. For the first-time login, you need to change the activation password: Click **admin → Modify Password** on the upper right of the Web browser page. Enter the old and new password and confirm the new password. Click **Save**.

Note

- The new password will take effect after rebooting.
- The hotspot password will be changed simultaneously after the activation password is changed.

Forgot Password

If you forget the password when logging in, you can change the password via PC Web or mobile Web.

1 ***Forget Password via PC Web*** .

2. ***Forget Password via Mobile Web***

Forget Password via Mobile Web

If you forget the password when logging in, you can change the password by email address or security questions.

On the login page, tap **Forget Password**.

Select **Verification Mode**.

Security Question Verification

Answer the security questions.

E-mail Verification

1. Export the QR code and send it to ***pw_recovery@hikvision.com*** as attachment.
2. You will receive a verification code within 5 minutes in your reserved email.
3. Enter the verification code into the verification code field to verify your identification.

Click **Next**, create a new password and confirm it.

Forget Password via PC Web

If you forget the password when logging in, you can change the password by email address or security questions.

On the login page, click **Forget Password**.

Select **Verification Mode**.

Security Question Verification

Answer the security questions.

E-mail Verification

1. Scan the QR code via mobile device.
2. You will receive a verification code within 5 minutes in your reserved email.
3. Enter the verification code into the verification code field to verify your identification.

Click **Next**, create a new password and confirm it.

Person Management

You can manage person information on PC Web and mobile Web.

- ***Person Management on PC Web***
- ***Person Management on Mobile Web***

Person Management on Mobile Web

You can add, edit, delete, and search users via mobile Web browser.

Steps

1. Tap ≡ → **Person Management** to enter the settings page.

2. Add user.

1) Tap**+**.

2) Set the following parameters.

Employee ID

Enter the employee ID. The Employee ID cannot be 0 or exceed 32 characters. It can be a combination of uppercase, lowercase letters and numbers.

Name

Enter your name. The name supports numbers, uppercase and lowercase English, and characters. The name is recommended to be within 32 characters.

Room No.

Enter the Room No.

Note

The room No. refers to the mapping room No. which you can custom the No. on your own.

Long-Term Effective User

Set the user permission as long-term effective.

Start Date/End Date

Set **Start Date** and **End Date** of user permission.

Administrator

If the user needs to be set as administrator, you can enable **Administrator**.

User Role

Select your user role.

Card

Add card. Tap **Add Card**. Enter the **Card No.**, or present the card on the device and tap **Read**, and select the **Property**. Tap **Save** to add the card.

3) Tap **Save**.

3. Tap the user that needs to be edited in the user list to edit the information.

4. Tap the user that needs to be deleted in the user list, and tap to delete the user.

5. You can search the user by entering the employee ID or name in the search bar.

Person Management on PC Web

Click **Add** to add the person's information, including the basic information, certificate, authentication and settings.

Add Basic Information

Click **Person Management → Add** to enter the Add Person page.
Add the person's basic information, including the employee ID, the person's name, person type, etc.
Click **Save** to save the settings.

Set Permission Time

Click **Person Management → Add** to enter the Add Person page.
Enable **Long-Term Effective User**, or set **Start Time** and **End Time** and the person can only has the permission within the configured time period according to your actual needs.
Click **Save** to save the settings.

Add Administrator

Click **Person Management → Add** to enter the Add Person page.
Tap to enable **Administrator**, and the person you add will be administrator.
Click **Save** to save the settings.

Add Card

Click **Person Management → Add** to enter the Add Person page.
Click **Add Card**, enter the **Card No.** and select the **Property**, and click **OK** to add the card.
Click **Save** to save the settings.

Set Room No.

Click **Person Management → Add** to enter the Add Person page.
Click **Add**, enter the **Room No.** to add the room.

Note

The room No. refers to the mapping room No. which you can custom the No. on your own.

Click **Save** to save the settings.

Set Door Permission

Click **Person Management → Add** to enter the Add Person page.
Select Door 1 or Door 2, to configure the door permission of the person.
Click **Save** to save the settings.

View/edit Person

Click **Person Management → Add** to enter the Add Person page.
You can filter a person by entering the employee ID, name or card No.
You can view added people under the mode of card or list. You can click the card of the person or the editing icon to edit the information of the person.
Click **Save** to save the settings.

Set Public Password

Set Public Password on Mobile Web

After setting the public password, you can open the door via the public password.

Steps

1. Tap **Configuration → Access Control → Password Settings** .
2. Tap **+** to add public password.
   1) Enter the password and confirm the password.
   2) **Optional:** Add remarks for the password.
   3) Select Electric Lock.
3. Tap **Save** to save the settings.

Set Public Password on PC Web

After setting the public password, you can open the door via the public password.

Steps

1. Click **Configuration → Access Control → Password Settings** .
2. Click **Add** to add public password.

1) Select **Password Type**.
2) Enter the password and confirm the password.
3) **Optional:** Add remarks for the password.
4) Select Electric Lock.

3. Click **Save** to save the settings.

Sub Module Configuration

Set Sub Module on Mobile Web

You can configure the sub modules on mobile Web.

Steps

1. Tap → **Intercom** → **Sub Module Configuration** .
2. Tap **Touch Screen** Module.
3. Drag the block to adjust the brightness.
4. Tap to enable **Buzzer**.

Set Sub Module on PC Web

You can configure the sub modules on PC Web.

Steps

1. Click **Configuration** → **Intercom** → **Sub Module Configuration** to enter the settings page.

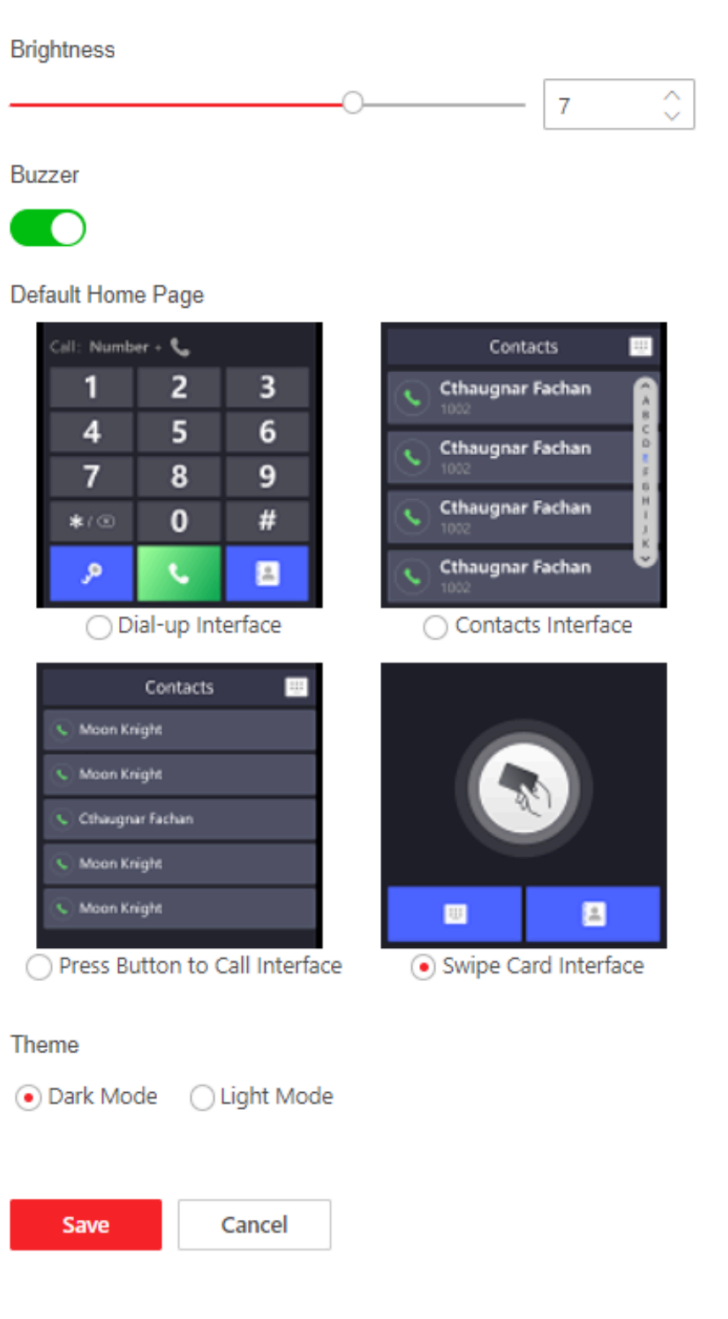

Figure 7-3 Sub Module Configuration

2. Click ⚙ to set sub module parameters.

1) Drag the block or enter the value of brightness.
2) Click to enable **Buzzer**.
3) Select the default home page of the sub module.
4) Select **Theme** as light or dark mode which will be applied to the touch-screen module.

5) Add a call button. Click **Add**. Enter the **name** and **call** and click **OK** to save the settings. After adding the button, it will show on the contacts page. You can tap the name to call.

Card Settings

Set Card Security

Tap → **Access Control** → **Card Security** to enter the configuration page.

Set the parameters and tap **Save**.

Enable NFC Card

In order to prevent the mobile phone from getting the data of the access control, you can enable NFC card to increase the security level of the data.

Enable M1 Card

Enable M1 card and authenticating by presenting M1 card is available.

M1 Card Encryption

Sector

M1 card encryption can improve the security level of authentication.

Enable the function and set the encryption sector. By default, Sector 13 is encrypted. It is recommended to encrypt sector 13.

Enable EM Card

Enable EM card and authenticating by presenting EM card is available.

Note

EM card is supported when the device connects a peripheral card reader that supports presenting EM card.

Enable DESFire Card

The device can read the data from DESFire card when enabling the DESFire card function.

DESFire Card Read Content

After enable the DESFire card content reading function, the device can read the DESFire card content.

Enable FeliCa Card

The device can read the data from FeliCa card when enabling the FeliCa card function.

Set Card Security on PC Web

Click **Configuration** → **Card Settings** → **Card Type** to enter the settings page.

Set the parameters and click **Save**.

Enable DESFire Card

The device can read the data from DESFire card when enabling the DESFire card function.

DESFire Card Read Content

After enable the DESFire card content reading function, the device can read the DESFire card No.

Notice Publication

You can set the notice publication for the device.

Click **Configuration → Preference → Notice Publication** .

Theme Management

Click **Media Library Management → +** to upload the picture from the local PC.

Note

- Up to 5 pictures can be uploaded. Each of the pictures should be less than 10 MB.
- The supported picture formats are jpg, jpeg, png and bmp.
- We recommend keeping the aspect ratio of the image/video the same as that of the screen, otherwise it will automatically stretch to fill the screen.

Click **+**, and set **Name** to create a theme. After creating the theme, click **+** in the **Theme Management** panel to select pictures from the media library. Click **OK** to add pictures to the theme.

Schedule Management

After creating a theme, you can select the theme and draw a schedule on the time line.

Select the drawn schedule, and you can edit the exact start and end time.

Select the drawn schedule and you can click **Clear** or **Clear All** to delete the schedule.

Slide Show Interval

Enter a number to set the slide show interval. The picture will be changed according to the interval.

7.2 Configuration via Client Software of the Main Unit

7.2.1 Device Management

Device management includes device activation, adding device, editing device, and deleting device, and so on.

After running the iVMS-4200, video intercom devices should be added to the client software for remote configuration and management.

Add Online Device

Before You Start

Make sure the device to be added is in the same subnet with your computer. Otherwise, please edit network parameters first.

Steps

1. Click **Online Device** to select an active online device.
2. Click **Add**.
3. Enter corresponding information, and click **Add**.

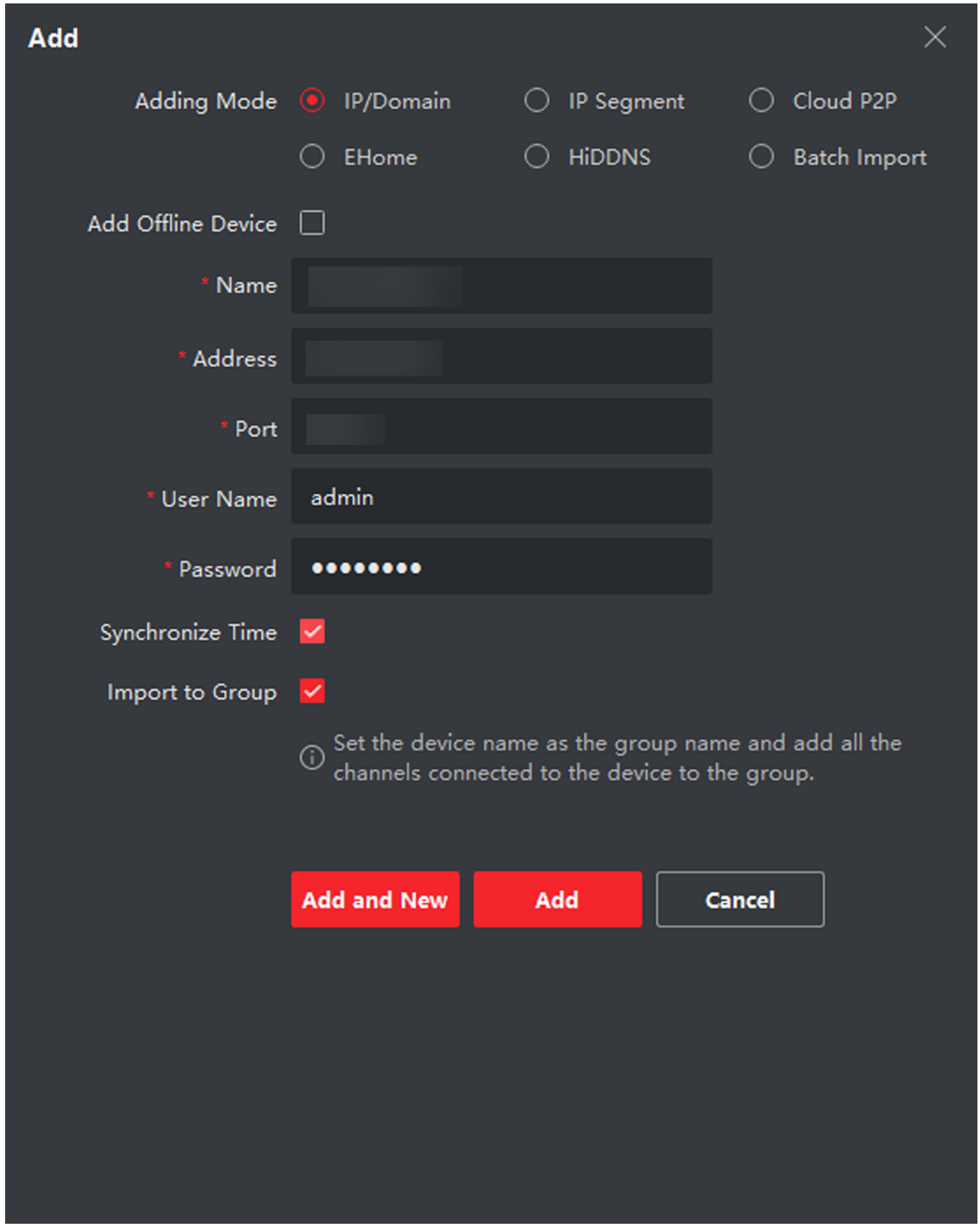

Figure 7-4 Add to the Client

Add Device by IP Address

Steps

1. Click **+Add** to pop up the adding devices dialog box.
2. Select **IP/Domain** as **Adding Mode**.
3. Enter corresponding information.
4. Click **Add**.

Add Device by IP Segment

You can add many devices at once whose IP addresses are among the IP segment.

Steps

1. Click **+Add** to pop up the dialog box.
2. Select **IP Segment** as **Adding Mode**.
3. Enter corresponding information, and click **Add**.

7.2.2 Remote Configuration via Client Software

After login to the Client Software and add main units to the Client, you can click to set the parameters of the device.

Note

It will automatically jump to the Web configuration page of the main unit. For more information of Web configuration, please refer to ***Configuration via Web 4.0*** .
Run the browser, click → **Internet Options** → **Security** to disable the Protected Mode.

See Far, Go Further